VOLVO PENTA

ACCESSORIES & MAINTENANCE PARTS

Features, benefits and specifications

When using Genuine Volvo Penta Parts and Accessories, you're helping to ensure your Volvo Penta product will be maintained and optimized to the highest quality standard.

Our core values – Quality, Safety and Environmental Care – are always built into each component. We design, test, develop and manufacture our genuine parts and accessories to the same quality level as we do with our engines. In this way you get high quality products with a warranty that you can rely on. Each component is original and made to match.

At your Volvo Penta Dealer, you will find specially trained mechanics that will handle and fit the components correctly. More than this, you get one contact for everything. Volvo Penta dealers also provide service, maintenance, support and warranties for all Volvo Penta products.

Double your warranty

Genuine Volvo Penta parts and accessories are covered by our standard 12 month warranty. Have them supplied and installed by an authorized Volvo Penta dealer and we'll extend your warranty to 24 months — including the labor.

Consult your nearest dealer for more details.

Find your dealer

Visit www.volvopenta.com/dealerlocator or download our app to search among our 3,500 dealers worldwide.

CONTENT

EASY CONNECT **6**

EVC **8**
EVC options 9
Battery Management System 10
Controls 11
Instruments 12

MECHANICALLY OPERATED CONTROLS & INSTRUMENTS **16**
Mechanically operated controls 17
Analogue instruments 23

STEERING **28**

BOAT TRIM SYSTEM **31**

ACTIVE CORROSION PROTECTION **32**

ENGINE ACCESSORIES **34**
Fuel supply 35
Exhaust system 40
Chemicals 43
Cooling system 48
Power takeoff 53
Electrical supply 54
Transmission 56
Air heater 58
Sound absorbent panels 59
Repowering kits 60

PROPELLERS **64**
Duoprop propellers for Aquamatic 65
Single propellers for Aquamatic 70
Propellers for Volvo Penta IPS 72
Folding propellers for saildrive and shaft 74
Fixed propellers for saildrive 78
Anodes 79

EXCHANGE COMPONENTS **80**

MAINTENANCE PARTS **81**
Diesel engines 81
Petrol engines 83
Drives 86
Maintenance kits 87

HIGHLIGHTS

EASY CONNECT WITH YOUR SMART DEVICES

We're putting the boat in the palm of even more hands with Volvo Penta Easy Connect. Now, the solution that gives boaters a dashboard-style overview of data, route information, and much more – directly on a smart device – is compatible with even more engines and also available for Android.

PAGE 6

MECHANICAL CONTROLS FOR POWERBOATS

Our range of side and top mount controls for mechanically operated engines has been developed with ergonomics and safety as top priorities. Easy to operate trim buttons and neutral safety switch are standard.

PAGE 18

NEW ACTIVE CORROSION PROTECTION FOR STERNDRIVES

With Active Corrosion Protection for Sterndrives, Volvo Penta is taking yet another step towards easier boat ownership. The system is designed to constantly monitor and protect your drive from galvanic corrosion, thus replacing the traditional anodes. Full system integration means you can see the protection status at helm.

PAGE 32

VOLVO PENTA MAINTENANCE KITS

Time to prepare for next season? Volvo Penta Maintenance Kits come pre-packaged with the basic parts needed. Available for diesel engines and Aquamatic Sterndrives.

PAGE 87

VOLVO PENTA EASY CONNECT

Volvo Penta Easy Connect gives you a dashboard-style overview of boat and engine data, route information, and more – via Bluetooth®, directly on your smart devices. All you need is the Easy Connect Interface connected to your engine, and the Easy Connect app installed on your tablet or smartphone. The functions also make it an ideal complement to the mounted instruments at the helm. But the experience doesn't just stay onboard. You can easily access saved routes and boat data from home – reliving the moments, or plan for your next trip.

Share the experience

Let your friends and family monitor the trip onboard with Easy Connect. The app lets them follow and save routes, with the possibility to share them on social media – while still keeping a curious eye on speed and heading. Routes and boat data are automatically stored in the Easy Connect app, and can later be accessed and shared from anywhere (sharing function requires an Internet connection).

Interact with your Volvo Penta dealer [4) 5)]

Easy Connect makes it possible to share diagnostic trouble codes with your selected Volvo Penta dealer, including; serial number and engine hours. A useful function when booking a service or inspection – allowing your dealer to prepare service and help more efficiently.

Easy installed interface

To get started, the Easy Connect interface plugs directly into the multilink at the helm station, or into the engine harness on non-EVC gasoline engines.

NMEA functionality

The Easy Connect interface includes NMEA2000 functionality. This means it can also be connected to an existing NMEA network within the boat. This enables you to access additional data from i.e. speed and depth sensors.

In addition, the Easy Connect interface can be used to convert engine data into NMEA2000 compatible chart plotters/multi-function displays onboard.

Compatibility

Easy Connect is available for the following engines in single and twin installations:

- D1/D2 engines with MDI
- Non-EVC gasoline engines from model year 2006
- Diesel and gasoline engines with EVC (except D3 and gasoline engines produced before 2007 with EVC-MC A/B)

The application is available for Apple devices with iOS 10 and later. For Android devices, the operating system version must be 5.0 or later with Bluetooth® 4.2.

Please note that certain functions and features are not available for all engine types. For more information, visit www.volvopenta.com/easyconnect.

Featured data within the app

The Easy Connect app is capable of showing data provided by your engine, as well as information from additional sensors and functionality installed in your boat:

Engine and boat data	
Engine speed	Battery voltage
Engine hours	Warnings and alarms
Oil pressure	Coolant temperature
Diagnostic trouble codes [5)]	Boat speed [3)]
Depth [2)]	Rudder position [1) 2)]
Fuel tank level [1) 2)]	Drive trim (Aquamatic) [1)]

With Trip computer software (EVC)	
Average fuel economy [2)]	Trip distance
Distance to empty [2)]	Fuel used
Fuel economy [2)]	Fuel rate
Time to empty [2)]	

Additional features	
Journeys [3)]	Share journeys [4)]
Share engine data with your dealer [4) 5)]	

1) Require EVC 2) Require additional sensors 3) Require additional sensors or mobile device GPS 4) Sharing function requires an internet connection 5) Not available for D1/D2 and engines with EVC produced before 2009 (available from EVC-C3).

Easy Connect interface kits

Part no	Interface kit
23194818	D1 and D2 engines with MDI*
23194818	Diesel and gasoline engines with EVC
23194833	Non-EVC gasoline engines MY 2006 and later*
Adapter cable is required for the engines listed below:	
23370425	Adapter cable, diesel engines with EVC-A
3883170	Adapter cable, non-EVC gasoline MY2006-2008

* Order two interface kits for twin installations.

Captain's View (connected)

When onboard, Easy Connect provides a complete view of the boat's vital information in real time. Switch between different menu screens, showing boat speed, engine speed, maps etc. and share your experiences on social media.

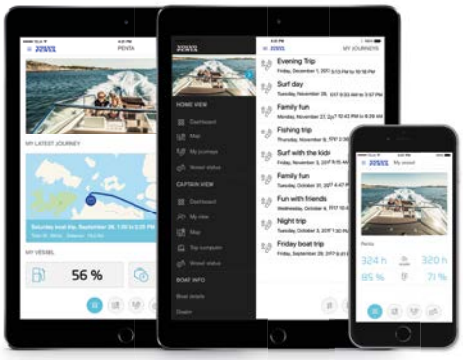

Home View (not connected)

Home View stores your past journeys so that you can recreate them and share on social media. You can also access an overview of key data such as fuel tank level and engine hours, and e-mail engine status to your Volvo Penta dealer.

iOS® is a registered trademark of Cisco Systems®, Inc. (used under license by Apple®, Inc.). Android® is a registered trademark of Google®, Inc. Bluetooth® is a registered trademark of Bluetooth SIG, Inc.

EVC

EVC – Electronic Vessel Control – is Volvo Penta's common electronic platform for controlling engine and transmission and integrating all driver information. EVC is based on CAN-bus technology and lets engine, drives, controls and instruments quickly exchange information. It constantly supervises all important functions and takes precautionary measures if needed, always keeping you updated in an intuitive way.

Furthermore, EVC also opens up a lot of possibilities when it comes to installing new, previously unthinkable, hardware and software features. Joystick driving and docking, Low-speed mode, Powertrim assistant and more – are all based on the intelligence of EVC.

CONTROLS

Volvo Pentas wide range of ergonomically, solid and smart EVC controls.

INSTRUMENTS

Multi-information displays and EVC instruments with all the information that you want.

Easy Boating options

Take the opportunity to customize your boat with the options of your choice – when you order a new boat or when you wish to upgrade your present boat. The table shows what is available for each drive system. Talk to your Volvo Penta dealer for advice!

	Volvo Penta IPS	Aquamatic Sterndrive	Forward Drive	Diesel inboard	Sailboat drive system
Joystick Docking	●	●1, 5	—	●5	—
Joystick Driving (diesel engines)	●	●1, 5	—	●5	—
Dynamic Positioning System	●	—	—	—	—
Battery Management System	●	●	●	●	●
Sportfish Mode	●	—	—	—	—
Autopilot	●	●1, 5	—	●1, 5	—
Interceptor System	●	●5	—	●	—
Powertrim Assistant	—	●	●	—	—
Water Sport Control	—	●7	●7	—	—
Tow Mode for water sport	—	●2	●	—	—
Glass Cockpit system	●	●	●	●	●4
Trip computer	●	●	●	●	●4
Cruise control	●	●	●	●	●4
Single-lever Mode	●	●5	—	●5	—
Low-speed Mode	●	—	—	●3	●6
Active Corrosion Protection	●	●	●	—	—

● Available
— Not available
1) Requires factory-installed electronic steering
2) Single installations
3) D4–D13
4) D3–D4
5) Requires twin installation
6) D4
7) Single gasoline installation

Dynamic Positioning System

The Dynamic Positioning System for IPS is a perfect feature when you wish to automatically maintain your position and heading for a moment, i.e., when preparing for docking. With the repositioning feature, you can automatically rotate the boat, move forward, backward and sideways, while remaining in DPS- mode – with just a simple tap of the joystick.

Joystick Driving

A whole new way to maneuver with precision at all speeds. You steer comfortably with the joystick. The integrated autopilot supports by automatically engaging after every course change.

Joystick Docking

Makes docking easy, even fun. Forget complicated maneuvers in close quarters. Just move the joystick in any direction and your boat will follow. You can install up to six Joystick Docking stations on your boat.

Interceptor System

The robust and compact design of the Interceptor System (IS) ensures efficient and reliable trimming for Volvo Penta-powered yachts 35–100 feet. Fully integrated with EVC, it has become the perfect Auto-mode solution. Fully automatic trim adjustments will make your driving easier than ever. Available in sizes between 300-1.050 mm.

Cruise control

With fingertip control of your engine rpm, you can fine-tune your boat's speed for best possible fuel economy and comfort.

Low-speed Mode

Reduces boat speed at idling by 50% from 5–6 knots to 2–3 knots. Integrated in the control. Perfect when you're driving in marinas and canals.

Glass Cockpit System

Gathers all driver information in one place – for enhanced overview and instant control of both navigation and engine.

Battery Management System

The system gives you a complete overview of battery status, helping you to manage your onboard electrical system. See page 10.

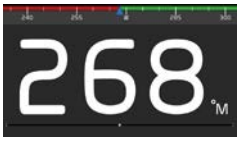

Autopilot

EVC-integrated, locks automatically to steering wheel course changes (shadow drive).

Powertrim Assistant

Gives you the best possible drive trim – fully automatically – for perfect running attitude. Results in optimum performance and low fuel consumption.

Trip computer

Get trip computer functionality with information about fuel consumption, distance to empty, trip time and much more for optimizing your boat's performance.

Sportfish Mode

Makes it possible for you to rapidly turn your boat around its own axis – and follow the fish at high speed in reverse, using only the engine controls.

Water Sport Control

Take full control of boat speed, drive trim, ballast tanks and trim tabs. Create your own user presets.

Single-lever Mode

Operate twin, triple or quad engines with only one lever. Gives you easy control over speed even in rough seas.

BATTERY MANAGEMENT SYSTEM

Forget heavy bunches of keys and finding main circuit breakers. The Battery Management System – with e-Key remote – allows you to manage your onboard electrical system remotely. By pressing the ON button the system powers up with car functionality and at the same time authorizes you as the user of the boat.

In combination with EVC, the Battery Management System gives you a complete overview of battery status in user displays conveniently located in up to six stations onboard. The system offers you a number of smart features such as battery protection and automatic start aid.

e-Key remote

Battery Management Display

Battery Control Module

Complete Control

With the Battery Control Module acting as a hub, the boat's entire electrical system will be both more reliable and easier to monitor. Stay constantly updated at the helm on the boat's battery status in the intuitive display –peace of mind, ease of use and easier boating guaranteed! On our website for battery management you can easily get information regarding which parts you need and what your installation would look like. Visit our website at: volvopentabatterymanagement.com

Requirements

With Volvo Penta EVC-E3, the EVC and battery management systems are integrated together. This means you receive battery data in the boat's driver display (Glass cockpit) and connection to the boat's ignition system via the e-Key.

In older EVC systems – or when using a non-Volvo Penta engine – the battery management system is available as a stand-alone unit. All interaction is done via the battery management display and the button panel on the battery control module. Using the e-Key, you can turn on the main switch, lights, windlass etc.

Installation

Volvo Penta recommends installing battery management for all new installations or re-powering. If you already have the battery management module it is easy to install e-Key remote as an accessory. Battery management reduces number of components needed in installation.

Battery Management System

Part no	Description
22645632	Battery Control Module
22645608	Battery Management Display
22468483	Battery Management Sensor
23060771 23060773	e-Key remote e-Key remote (only Japan)

Push-buttons for EVC options such as:

- Low-speed mode
- Single-lever mode
- Cruise control

CONTROLS

The line-up of EVC controls features something for every taste. All features are chosen and designed to offer the best level of safety and comfort. All Volvo Penta controls are ergonomic and have a solid feel to them. The EVC controls are developed together with the EVC system for maximum reliability.

In line with Volvo Penta's "Easier boating" concept, a number of functions have been built into the new controls. The controls comes with:

- **Station on/off function**
- **Throttle only function**

	IPS		Diesel Inboard			Aquamatic Sterndrive			
	Twin[1, 4]	Joystick	Twin[2, 4]	Single[4]	Joystick	Twin[4]	Single[4]		Joystick
EVC-E	22861802	22862204	22861802	22893474	22862207	22893867	22893819		22862202
EVC-D		22862204			22862207				22862202
	Twin[1, 3]	Joystick	Twin[3]	Single		Twin	Single	Single	Joystick
EVC-E	22498615	22596764	22498615	22498549		22498457	22498346	22561262	22596764
EVC-D	22498615	22596764	22498615	22498549		22498457	22498346	22561262	22596764

1) Also for triple and quadruple installations.
2) For installation with Interceptor System use 22861796.
3) For installation with Interceptor System use 22498661.
4) Requires stand-alone HCU

	IPS		Diesel Inboard		Aquamatic Sterndrive	
	Twin[1]	Twin[1]	Twin	Twin	Twin	Twin
EVC-C	21164033	21164029	21164033	21164029	21164033	21164029
EVC-B2	21164033	21164029	21164033	21164029	21164033	21164029
EVC-B1		3819900		3819900		3819900
EVC-A		3819900		3819900		3819900
	Joystick[5]		Single	Single	Single	Single
EVC-C	22498703		21164031	21164027	21164031	21164027
EVC-B2	22498703		21164031	21164027	21164031	21164027
EVC-B1				3819899		3819899
EVC-A				3819899		3819899

1) Also for triple and quadruple installations.
5) Replaces the old Joystick.

INSTRUMENTS

The information you want, at up to four different places on board, including the availability of engine data in your chart plotter. The instruments are developed for Volvo Penta engines, and give highly accurate readings and reliability.

Volvo Penta instruments are developed exclusively for the EVC system. A guarantee for accurate readings and high reliability. Furthermore they are easy to read day and night, thanks to double glazing and sophisticated lighting.

Engine monitoring displays

With Volvo Penta engine monitoring displays, you get all the information you need in one place. Thanks to the trip computer functions, it is easy to find your most economical cruising speed, adjust for the optimum trim angle, etc. You have direct access to all essential engine and boat data and you can adapt the information presentation to your own preferences. An important benefit is that you get messages, such as error codes, in plain text.

2.5" display

The 2.5" display is an information center in a compact size.

Generation	Part no
EVC-E	22499270
EVC-D	22499270

4" display (b/w)

The 4" black and white display can show data from two engines at the same time, plus trip computer information.

Generation	Part no
EVC-D	22072273
EVC-C	22072254
EVC-B	22072190
EVC-A	3807827

4" colour display

The 4" full-colour display is easy to read with custom screens. It shows all available information for one or two engines.

Generation	Part no
EVC-E	22369186
EVC-D	22369186

7" colour display

The 7" full-colour display shows all available information for up to three engines in a new interface. Digital or analogue readers, your tailored view or standard view, etc. Active software functions, such as Low-speed Mode, are displayed. Operation is intuitive thanks to the easy to understand menus.

Generation	Part no
EVC-E	22722418
EVC-D	22722418
EVC-C	22722418

EVC Tachometer

Tachometer 85 mm or 110 mm, with engine hours and alarm symbols in the LCD-display.

Generation	Part no	Color	RPM	Size	
EVC A–B	881646	Black	0–4000	85 mm	
EVC A–B	881652	White	0–4000	85 mm	
EVC C	21628160	Black	0–4000	85 mm	
EVC C	21628159	White	0–4000	85 mm	
EVC MC, EVC C	21628157	White	0–6000	85 mm	
EVC MC, A-B	881647	Black	0–6000	85 mm	a)
EVC MC, A-B	881653	White	0–6000	85 mm	a)
EVC C1-E3	21511178	Black	0–4000	110 mm	
EVC C1-E3	21511176	White	0–4000	110 mm	
EVC C1-E3	21511183	Black	0–6000	110 mm	
EVC C1-E3	21511180	White	0–6000	110 mm	

a) Petrol - secondary station

Engine monitoring display options

Features and data	2.5"	4"	7" *	Tacho-meter
Color screen		●	●	
Day/night mode		●	●	
Pop-up menus (shortcuts)		●	●	
Video input			●	
Neutral beep (on/off)	●	●	●	
Engines displayed (max)	1	2	3	1
Engine rpm	●	●	●	●
Engine hours	●	●	●	●
Coolant temperature	●	●	●	
Voltage	●	●	●	
Oil pressure	●	●	●	
Turbo pressure (diesel)	●	●	●	
Alarms and warnings	●	●	●	●
Diagnostics in text	●	●	●	
Diagnostics in text, extended info		●	●	
Transmission, oil pressure *	●	●	●	
Transmission, oil temperature *	●	●	●	
Boat speed 1)	●	●	●	
Fuel level 2)	●	●	●	
Fresh water level 2)	●	●	●	
Depth with alarm 2)	●	●	●	
Sea water temperature 2)	●	●	●	
Rudder angle 2)	●	●	●	
Powertrim angle (Aquamatic)	●	●	●	
Active Corrosion Protection info 3)	●	●	●	
Low-speed mode, slip rate 4)	●	●	●	
With Trip computer software:	○	○	○	
Instant fuel rate	●	●	●	
Trip time	●	●	●	
Trip fuel	●	●	●	
Average fuel rate	●	●	●	
Time to empty 2)	●	●	●	
Instant fuel economy 1)	●	●	●	
Trip distance 1)	●	●	●	
Average fuel economy 1)	●	●	●	
Distance to empty 1)	●	●	●	
With Dynamic Positioning System:			○	
Bearing			●	
Direction of movement			●	
GPS signal strength			●	

* Refers to 7" colour dispaly on page 12.

● Standard ○ Optional. *Depending on transmission. Requires sensors.

1) Requires extra sensor or NMEA interface.
2) Requires extra sensor.
3) Volvo Penta IPS. Requires Active Corrosion Protection.
4) Requires low-speed mode.

Glass Cockpit Multi-Function Display (MFD) 7"

The 7inch Multi-Function Display (MFD) is the perfect stand-alone solution for smaller boats. It allows you to monitor and control all driver information including; navigation, engine data, warnings and electronic features in one place. It consists of all-in-one solutions with built in GPS antenna and SD-card reader.

Features:
- Pinch-to-zoom and other multi-touch controls
- Preloaded with BlueChart g2 maps and LakeVü HD Maps
- Fully integrated with Volvo Penta Electronic Vessel Control (EVC) monitoring features such as Dynamic Positioning System (DPS), Interceptors and Autopilot through the displays
- Heading and position refreshed 10 times per second
- Simplified SOS calling
- View and control your device from a smartphone or tablet
- Low profile flush mount or smooth flat mount for a glass helm look

Dimensions, W x H x D: 22.2 x 14.2 x 6.1 cm (8.75" x 5.6" x 2.6")
Display size, W x H:
15.5 x 8.6 cm; 17.8 cm diagonal (6.1" x 3.4"; 7.0" diagonal)

Generation	Part no
EVC-E	23093413

Display engine data on your chartplotter

NMEA is a communication standard used to connect sensors, displays and other marine electronics to a network. With a NMEA interface, you can connect the engine to this network and enable engine data in a NMEA- compatible device, such as chartplotter or multi-function display.

Volvo Penta offers NMEA 0183 and NMEA 2000 interfaces to support the compatibility of your device. In addition, the Volvo Penta Easy Connect interface features both NMEA 2000 functionality and Bluetooth® connectivity, which offers even more opportunities. Learn more on page 6-7.

EVC Generation	System	Part no
EVC B-E4	NMEA 0183	3807587
EVC B-E4	NMEA 2000	22813366

1. 2. Speedometer instrument (5"/110 mm)

No units, select mph, km/h or knots.

Part no	Colour	Generation	Interval	
21234531	Black	MC (D3), EVC-C	0-40	a)
21234532	White	MC (D3), EVC-C	0-40	a)
21234533	Black	MC (D3), EVC-C	0-60	a)
21234534	White	MC (D3), EVC-C	0-60	a)

3. Speedometer instrument, 85 mm

Part no	Colour	Speed	
874916	Black	0-20 knots/23 mph	a)
874929	White	0-20 knots/23 mph	a)
874917	Black	0-40 knots/45 mph	a)
874930	White	0-40 knots/45 mph	a)
881645	Black	0-60 knots/70 mph	a)
881650	White	0-60 knots/70 mph	a)

4. 4-in-1 gauge (5"/110 mm)

Instrument with 4 gauges.

Part no	Colour	Functions	
3847876	Black	Coolant temp.,voltage, oil pressure, fuel level	b)
3885214	White	Coolant temp.,voltage, oil pressure, fuel level	b)
3847879	Black	Coolant temp.,voltage, trim, fuel level	
3885215	White	Coolant temp.,voltage, trim, fuel level	

5. Fuel tank level instrument, 52 mm

Sensor 874840 is needed.

Part no	Colour
874914	Black
874926	White

6. Alarm instrument, 52 mm

7 alarms: Oil pressure, water in fuel filter, battery, coolant temperature, coolant level, oil level, fault/serious fault.

Part no	Colour	
874915	Black	
874927	White	c)

Oil temperature instrument, 52 mm

Part no	Colour	Temperature
874905	Black	0-150° C
874922	White	0-150° C
881857	Black	40-300° F
881858	White	40-300° F

1

2

3

4

5

6

7

8

9

10

11

12

13

14

7. Engine oil pressure instrument, 52 mm

Part no	Colour	Pressure	
874908	Black	0-7 bar	b)
874923	White	0-7 bar	b)
874919	Black	0-100 PSI	b)
874932	White	0-100 PSI	b)

8. Engine coolant temperature instrument, 52 mm

Part no	Colour	Temperature
874904	Black	0-120° C
874921	White	0-120° C
874918	Black	40-250° F
874931	White	40-250° F

9. Water tank level instrument, 52 mm

Freshwater level sensor 3809098 is needed.

Part no	Colour
3809992	Black
3809993	White

10. Rudder position instrument, 52 mm

Also order 3809099 and 3594073.
SX and DPS require only 3809099.

Part no	Colour
3812914	Black
3812917	White

11. 12. Drive trim position instrument, 52 mm

Diameter 52 mm.

Part no	Colour	Description
881648	Black	LCD (7-40)
881654	White	LCD (7-40)
3812881	Black	Analogue
3812911	White	Analogue

13. Turbo pressure instrument, 52 mm

Part no	Colour	Interval
874910	Black	0-3 bar
874924	White	0-3 bar
874920	Black	0-45 PSI
874933	White	0-45 PSI

14. Battery voltage instrument, 52 mm

Part no	Colour	Voltage
881649	Black	12 V
881658	White	12 V
874913	Black	24 V
874925	White	24 V

a) Also order multi sensor. Through hull 3587054. Transom mount 3587055.
b) Not D3.
c) Petrol - secondary station.

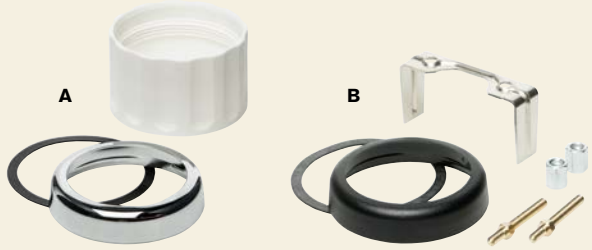

Mounting kit with front ring

A. Panel thickness up to 12 mm/15 mm

Part no	Instrument diameter	Panel thickness	Description
874709	52 mm	0-12 mm	Black ring
874708	85 mm	0-12 mm	Black ring
3847888	110 mm	0-15 mm	Black ring
874733	52 mm	0-12 mm	Chrome ring
874732	85 mm	0-12 mm	Chrome ring
3885216	110 mm	0-15 mm	Chrome ring

B. Panel thickness 12–25 mm

Part no	Instrument diameter	Panel thickness	Description
881611	52 mm	12-25 mm	Black ring
881612	85 mm	12-25 mm	Black ring
881613	52 mm	12-25 mm	Chrome ring
881614	85 mm	12-25 mm	Chrome ring

X-ring for flush mounting

Part no	Instrument diameter	Description
874843	52 mm	Flush mounting
874844	85 mm	Flush mounting

ADU – Auxiliary Dimmer Unit

The ADU makes it possible to dim all your EVC-instruments through the EVC main panel.

Note! “Easy Link” must be installed on the application.

Part no
3848966

MECHANICALLY OPERATED CONTROLS & INSTRUMENTS

MECHANICALLY OPERATED CONTROLS

The Volvo Penta mechanical control heads are known for their quality, durability and excellent performance thanks to high-precision mechanics. Use low-friction control cables for even greater ease.

Sailboat control

The Volvo Penta mechanical sailboat control is designed very much with sailing in mind as well as for controlling your engine.

Features and benefits:

- Designed to minimize risk of rope entanglement
- Tough and robust, made for the harsh marine environment
- High quality stainless steel
- Splash protected installation
- Reliable and proven mechanism with adjustable friction brake
- Mechanism can be mounted horizontally or vertically
- Neutral safety switch available as option

Part No	Description
22688044	Lever & small cover (stainless steel)
851601	Mechanism
855352	Neutral safety switch
Select length	Control cable

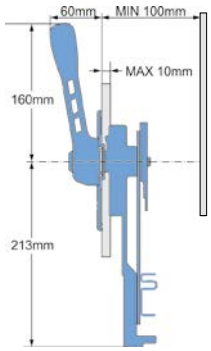

Upgrade your existing Volvo Penta sailboat control

If you have a previous model of Volvo Penta's sailboat control, you can easily upgrade to a new lever and a cover plate in stainless steel. If the existing control mechanism is in good condition, it does not need to be replaced.

Different upgrade options are available depending on the size of your current cover plate – consult the table.

Upgrading from large cover plate (107 x 166 mm)

Part No	Description
22576994	Lever (stainless steel)
22167713	Large cover plate* (stainless steel)
851601	Mechanism (for stainless steel cover plate)
853713	Large cover plate (black plastic)
1140095	Mechanism (for black plastic cover plate)
855352	Neutral safety switch

Upgrading from small cover plate (100 x 121 mm)

Part No	Description
22688044	Lever and small cover plate* (stainless steel)
851601	Mechanism
855352	Neutral safety switch

* If you keep the current control mechanism, minor modifications will be needed in order to fit the new stainless steel cover plate (detalied in the provided installation Instructions).

Xact Powerboat controls

The range of controls for mechanically operated engines has been developed with focus on ergonomics and safety. Easy to operate trim buttons and neutral safety switch are standard on all models. Pair that with a state of the art mechanism for smooth yet solid action, and you get a safe, robust and comfortable package.

This is the next generation of Xact controls, and replaces the previous versions.

Top mount

Great ergonomics, stylish looks and a state of the art mechanism guarantees a smooth yet solid experience.

Features and benefits:

- Neutral warm up - Release button for warming up the engine in neutral position.
- Neutral safety switch - Electrical neutral position switch, prevents engine being started in gear.
- Trim and tilt button - Tactile switch for simple operation of the drives trim and tilt.
- Master trim and tilt - Tactile switch to trim both drives (twin drives only).
- Friction adjustment - Adjustable friction brake for fine tuning.

Part no	Description
22928974	Single Top Mount with Trim switch and extension harness
22928976	Top Mount Twin installation with Trim switches and extension harness
22903907	Side Mount with Trim switch, safety lanyard and extension harness
22928971	Side Mount with Trim switch and safety lanyard

Xact control cables available on page 22.

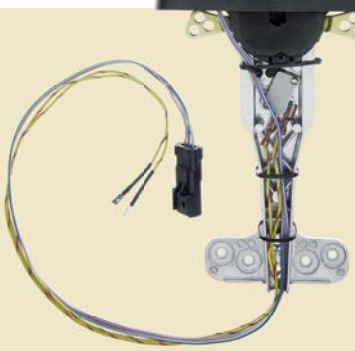

All controls have pre-mounted control mechanisms.

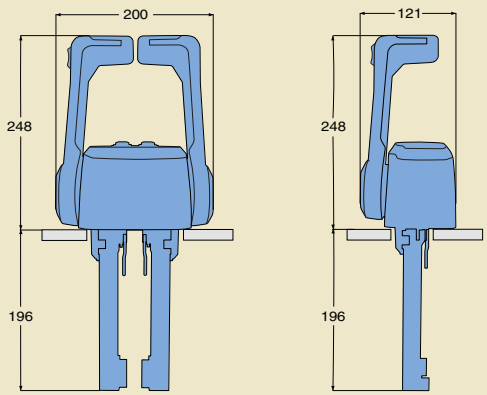

Side mount

With top class ergonomics, neutral interlock and safety lanyard it's the perfect choice for single engine installations. Designed for starboard side mount.

Features and benefits:

- Neutral interlock - Mechanical neutral position lock, prevents unintentional gear change.
- Neutral warm up - Release button for warming up the engine in neutral position.
- Neutral safety switch - Electrical neutral position switch, prevents engine being started in gear.
- Trim and tilt button - Tactile switch for simple operation of the drives trim and tilt.
- Safety cut-off switch - Connected to the included lanyard for emergency engine shut down.
- Friction adjustment - Adjustable friction brake for fine tuning.

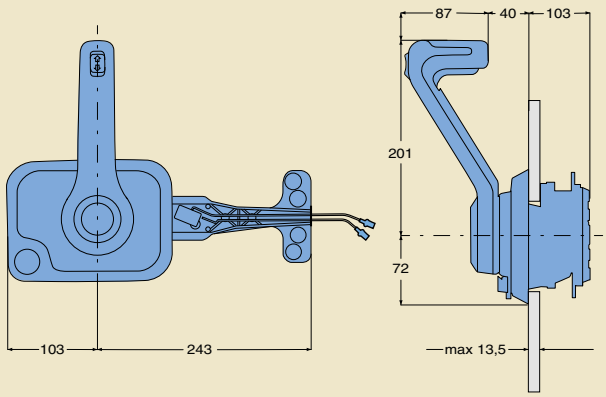

HOLE PATTERNS/CUTOUTS

Top mount twin

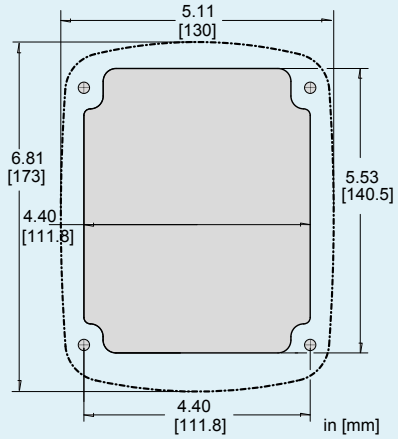

Top mount

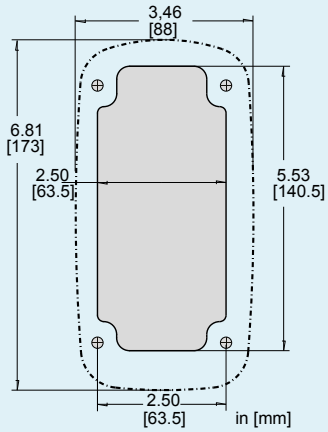

Side mount

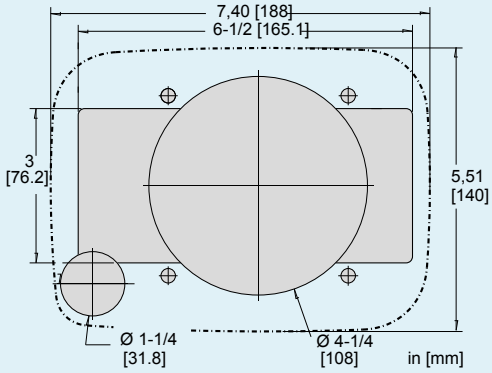

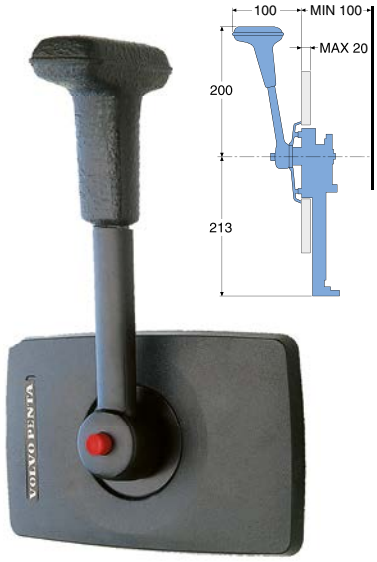

Control lever assembly PC-741, side-mounted

Control mechanism for side-mounting, part no. 1140095.

Part no
1140092

Control lever assembly PC-841, side-mounted with Power Trim function

Control mechanism for side-mounting, part no. 1140095.

Part no
1140091

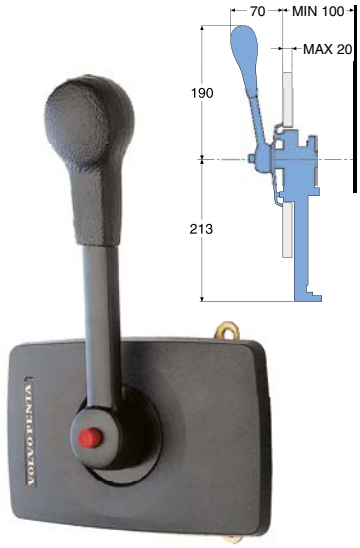

Control lever assembly PC-741, with sailboat lever, side-mounted

The sailboat control lever is specially designed for sailboats where lines and halyards could snag on a joystick. Control mechanism for side-mounting, part no. 1140095.

Part no
1140093

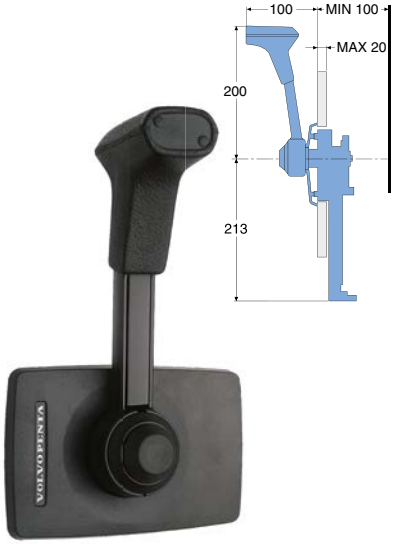

Control lever assembly PC-841, side-mounted

Control mechanism for side-mounting, part no. 1140095.

Part no
1140090

Control mechanisms and cables are not included unless this is specifically stated.

Control mechanism for top-mounting

The control mechanisms must be ordered separately for PC-740 and PC-840 control lever assembly kits.

Volvo Penta's control mechanisms have a simple and safe design and are manufactured of corrosion-resistant material. The mechanism has an accelerated action which transmits lever movements into even and economic engine acceleration.

Two control mechanisms are required for twin engine installations with single lever controls.

Part no
851600

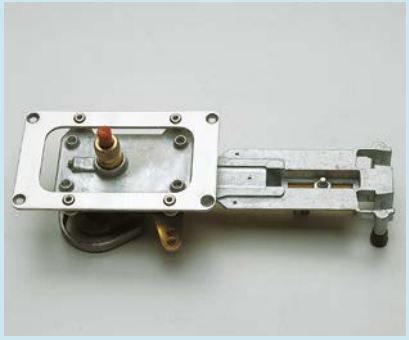

Control mechanism for side-mounting

The control mechanism must be ordered separately for PC-741 and PC-841 assemblies. Volvo Penta's control mechanisms have an uncomplicated and safe design and are manufactured of corrosion resistant materials.

The mechanism has an accelerated action which transmits lever movements into even and economic engine acceleration.

Part no	Description
1140095	PC-741/841

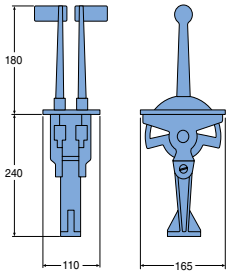

Double lever controls - PC-870/871 - top-mounted

Double lever controls have separate levers for gear changing and acceleration. The accelerator lever has an adjustable friction brake making it possible to adjust the "feel" of the lever to personal requirements. Two models are available, gear shift to the left or to the right. Double lever control for twin engine installations can be combined so as to have both accelerator levers in the centre of the installation. A mechanical neutral locking device allows gear shifting only at engine idling speeds. As an additional safety measure, a neutral safety switch, which only allows the engine to be started in the neutral position, is also fitted as standard.

The control lever is supplied complete with assembly kit for easy installation and connections to Volvo Penta control cables (including Xact cable).

For dual control stations with the PC-870/871 controls, the following parts are required:

2 x control lever assembly

2 x connection fork, part no. 1140074 for control cables

2 x control cable between upper and lower control station

2 x control cable to engine and transmission respectively

Note! For dual control station installations with the PC-870/871 control mechanisms, no DS unit is required.

Part no	Control	Gear shift
1140067	PC-870	Port
1140068	PC-871	Starboard

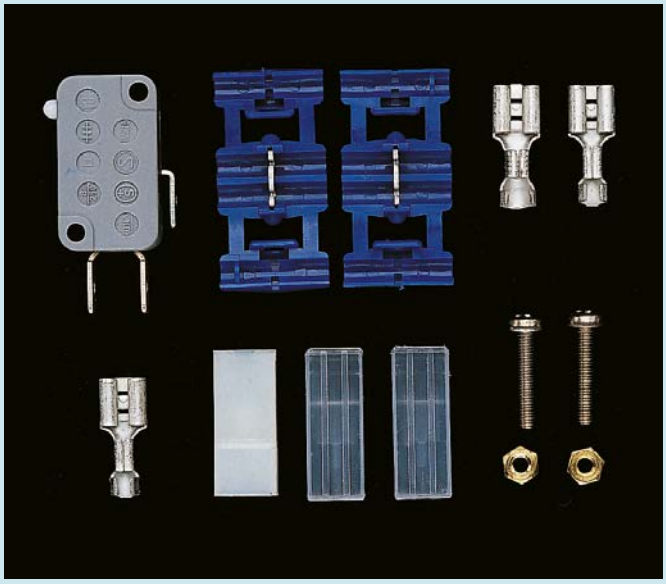

Neutral safety switch

The switch prevents unintentional manoeuvring of the vessel as it only permits starting of the engine when the gear shift is in the neutral position.

Part no	Fits
855352	PC-740/741/840/841

Safety lanyard

The safety lanyard is an important safety device, particularly for fast moving boats. It consists of two parts, a switch connected to the engines electric system and a cord that is attached to the pilot. Should the pilot fall in the boat or fall overboard, the engine is automatically stopped.

Part no	Fits
3889798	TMD22-KAD300
3889799	Gasoline engines/D3 mech.
21469024	EVC-D to EVC-E3
3817104	EVC-A to EVC-C

Cord only

Part no	Fits
22027280	3889798-3889799
21552068	EVC sidemount
3858779	Xact sidemount, all generations

Control cables

Volvo Penta's control cables are manufactured of corrosion-resistant material with an outer sheath of HD polyethylene. They are designed following Volvo Penta's extremely stringent requirements for efficient operation with a minimum of play. They are permanently lubricated to ensure a minimum of friction and long service life. Single engine installations require two cables, twin installations require four.

Xact control cables

Volvo Penta Xact Control Cables have been designed to provide the smoothest and easiest throttle/shift operation; while at the same time reducing lost motion. All fittings are stainless steel and plated brass. The all stainless steel armored strand core allows for greater flexibility and is capable of being put into tighter bends for those difficult cable routings.

Xact

Part no	L, m
21633476	1.50
21633477	1.75
21633478	2.00
21633479	2.25
21633480	2.75
21633481	3.00
21633482	3.25
21633483	3.50
21633484	4.00
21633485	4.25
21633486	4.50
21633487	4.75
21633488	5.00
21633489	5.50
21633490	5.75
21633491	6.00
21633492	6.25
21633493	6.50
21633494	7.00
21633495	7.25

Part no	L, m
21633496	7.50
21633497	7.75
21633498	8.25
21633499	8.50
21633500	8.75
21633501	9.00
21633502	9.25
21633503	9.75
21633504	10.00
21633505	10.25
21633506	10.50
21633507	11.00
21633508	11.25
21633509	11.50
21633510	11.75
21633511	12.00
21633512	12.50
21633513	12.75
21633514	13.00

Part no	L, ft
21407218	3
21407219	4
3594991	4.7
3595377	5
40005275	6
21407220	7
21407221	8
21407222	9
21407223	10
21407225	12
21407226	13
21407227	14
21407228	15
21407229	16
21407230	17
21407231	18
21407232	19
21407233	20
21407234	21
21407235	22
21407236	23
21407237	24
21407238	25
21407239	26

Part no	L, ft
21407240	27
21407241	28
21407242	29
21407243	30
21407244	31
21407245	32
21407246	33
21407247	34
21407248	35
21407249	36
21407250	37
21407251	38
21407252	39
21407253	40
21407254	41
21407255	42
21407256	43
21407257	44
21407258	45
21407259	46
21407260	47
21407261	48
21407262	49

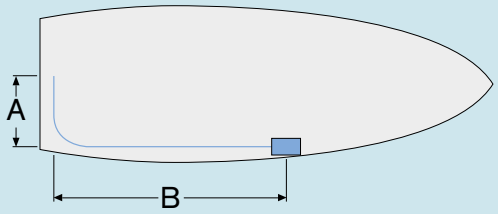

It is very important to select the exact cable length, fewer bends mean better operation and durability. Measure, in as straight a line as possible, the distance between the control mechanism and the engine/transmission connections. Calculate a radius of 200 mm for all bends. Adapt the cable as shown in the illustration L = A + B + 200 mm. If the measurement falls between two standard cable lengths, select the longer cable.

The cables must not be cut to size.

INSTRUMENT RANGE FOR NON-EVC GASOLINE ENGINES

Volvo Pentas instruments for non-EVC gasoline engines are based on the well proven design concept used by the EVC instruments, but modified to be able to communicate with all gasoline applications produced 2008 or later. With the tachometer gateway (easy link), additional EVC gauges will be available to form a complete dashboard range.

Instrumentation

The tachometer is available both in black or white, and has monochrome display for engine hours and instant fuel rate.

Included in the tachometer is an easy-link gateway which makes it possible to connect instruments for drive trim, oil pressure, coolant temperature and charging voltage.

The speedometer features a built-in GPS for accurate speed, and has a display for viewing COG and heading.

Part no	Description
23040335	Tachometer 85 mm, 6000 RPM, white dial
23040364	Tachometer 85 mm, 6000 RPM, black dial
23045964	Speedometer 85 mm, 60 knots, white dial
23045963	Speedometer 85 mm, 60 knots, black dial
22894884	Cable between engine and tachometer. (required)
874759	1 m – extension cable, tachometer to additional instruments
3807043	3 m – extension cable, tachometer to additional instruments

Applicable instrument

In addition to the tachometer and speedometer, the instruments below can also be connected. Please see page 14-15 for more information regarding the instruments. All instruments are available with white or black dial.

Engine oil pressure

Engine coolant temperature

Drive trim position

Drive trim position

Battery voltage

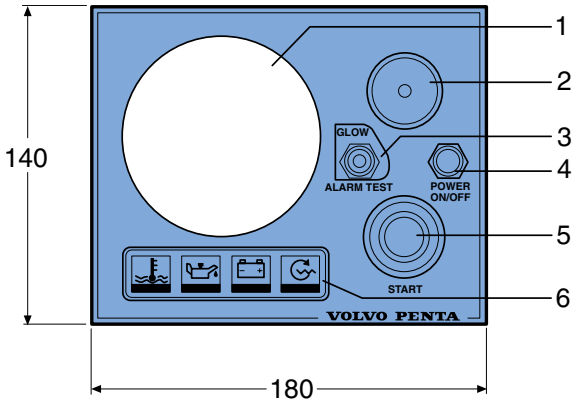

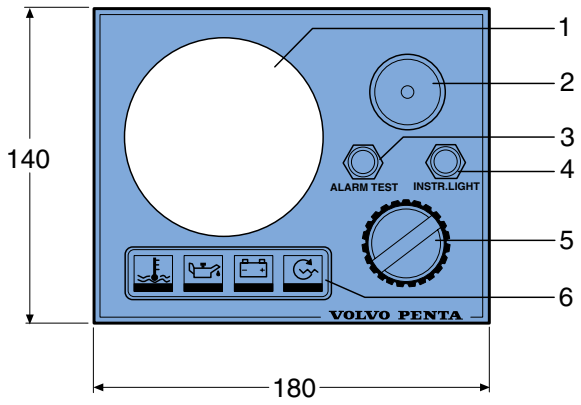

Instrument panel, standard

For either Main control position or Flybridge installation.

1. Opening for tachometer
2. Alarm buzzer
3. Toggle switch for pre-heater/alarm test
4. Instrument panel lighting ON/OFF switch
5. Start button
6. Warning light panel for:
   - coolant temperature
   - oil pressure
   - battery charging
   - pre-heater

Also order cover plate 858648 or tachometer.

Part no	Description
873594	Instrument panel, 12 V
873998	Tachometer, 3400 rpm, 12/24 V
873992	Tachometer, 4600 rpm, 12/24 V

Instrument panel, standard

Intended for either Main control position or Flybridge installation.

1. Opening for tachometer
2. Alarm buzzer
3. Push-button switch for alarm test
4. Push-button switch for instrument panel lighting
5. Ignition lock
6. Warning light panel for:
   - coolant temperature
   - oil pressure
   - battery charging
   - pre-heater

Also order cover plate 858648 or tachometer.

Part no	Description
3587077	Instrument panel, 12 V
3587076	Instrument panel, 24 V
873998	Tachometer, 3400 rpm, 12/24 V
873992	Tachometer, 4600 rpm, 12/24 V

Cover plate

To cover the tachometer opening in the instrument panel should a tachometer not be installed.

Part no
858648

Flipped Flybridge instrument panel, De Luxe

Excluding instruments, lamps and switches. The same design and dimensions as 3587074 but in reversed image.

Part no
860184

Front ring for instruments

Part no	Instrument diameter	Hole diameter
858643	52	60
873517	72	90

Alarm panel display

Used when alarm functions are moved from the instrument panel and separately installed. The panel contains symbols for coolant temperature, oil pressure, battery charging and pre-heater.

Note! The display panel is merely an empty housing, the required connections, lamps, etc., must be taken from the instrument panel.

Dimensions: 113 x 50 mm

Part no
858876

Toggle switch

Part no
814322

Tachometer kit, diesel engines

Also includes operating clock. Suitable for both standard and De Luxe instrument panels 873594, 3587077, and instrument installation kits 873582.

If required, also order:

Front ring 873517

Mounting bracket 873208

Part no
873992

Instrument kit with tachometer, petrol engines Includes:

Tachometer part no. 3855604

Coolant temperature gauge part no. 856811

Oil pressure gauge part no. 856812

Voltmeter part no. 873199

Part no
3858636

4" electronic display

For Volvo Penta EDC engines.

Part no
22949191

Digital Power Trim instrument kit

For Flybridge installation. Equipped with display showing the trim angle of the drive. Control unit 3855650 is suitable to operate the Power Trim.

Note! 3855650 must be ordered separately.

Part no	Drive
872498	DP-E/DP-G
3819708	SX/DP-S

Analog Power Trim instrument

For SX/DP-S drive. Shows the drive trim angle. Control unit 3855650 is suitable to operate the Power Trim.

Part no
3851787

Power Trim control unit

For custom made Power Trim control units:

Push-button switch for by-pass, part no. 828718.

Toggle switch, part no. 814322.

Rubber seal for toggle switch, part no. 828743.

Manoeuvring from controls – see group Control system.

Part no
3855650

Fuel gauge, kit

The fuel gauge shows the quantity of fuel in the fuel tank – an important function for marine safety. The sensor, which is installed in the fuel tank, is equipped with a float that follows the level of fuel in the tank.

Includes: instrument, sensor, cables and front ring.

Part no
873808

Fuel gauge, instrument

Instrument only for 873808. Including mounting bracket but excluding front ring. Front ring, see 858643.

Part no
863940

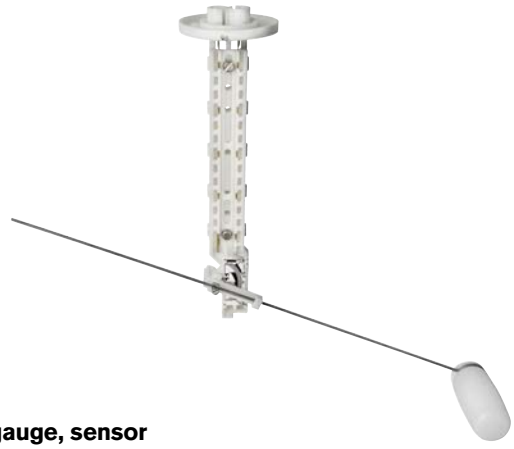

Fuel gauge, sensor

Sensor only for 873808.

Part no
873772

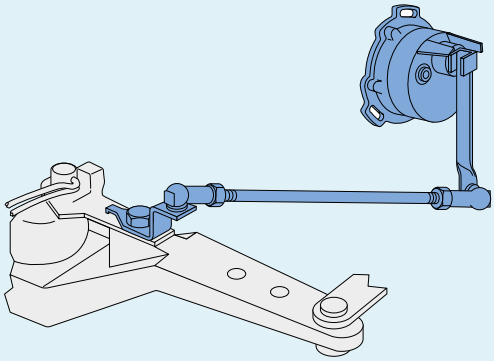

Rudder indicator, kit for drives, 12 V

The indicator shows the drive angle and is an invaluable aid when manoeuvring and mooring in crowded harbours. Complete kit for connection of sensor to the steering arm of the drive.

Part no
1140463

Rudder indicator, instrument, 24 V

Including mounting bracket but excluding front ring. Front ring, see 858643.

Part no
874416

Rudder indicator, kit

The indicator shows the angle of the rudder and is an invaluable aid when manoeuvring and mooring in crowded harbours.

Includes: Instrument, sensor, cables and front ring.

For DPH drive please also order 3594718.

Part no
1140465

Rudder indicator, instrument, for 12 V

Instrument only for 1140465. Including mounting bracket but excluding front ring. Front ring, see 858643.

Part no
863944

Rudder indicator, sensor

Sensor only for 1140465.

Part no
837772

STEERING

Volvo Penta offers reliable mechanical and hydraulic systems. Both systems have zero feed back function so the steering is not affected by forces such as waves etc. All Volvo Penta steering wheels are specially adapted to marine conditions, which means that they are anti-magnetic and made of corrosion resistant materials.

VOLVO PENTA STEERING SYSTEMS

With the tilt mechanism the boat driver can choose the most comfortable steering wheel angle. Just one example of superb steering control from the wide range of electronic, hydraulic and mechanical steering systems offered by Volvo Penta. For more information, please contact your local Volvo Penta dealer or visit www.volvopenta.com

Steering wheels

- Designed to match Volvo Penta controls and displays
- Non-magnetic stainless steel
- High-quality materials
- Fits most types of steering system
- Steering wheel hub included
- Conforms with the EN 28848 standard of the Recreational Craft Directive (94/25/EC) and with the ABYC P22 Safety standards for Steering Wheels.*

Model	Classic Mahogany	Leather	Stainless	Sport Mahogany
Part no	21729995	21649809	21673214	3843317
Grip	Mahogany	Leather	316 Stainless steel	Mahogany
Spokes	316 Stainless steel	304 Stainless steel	316 Stainless steel	Anodized aluminium
Recommended use	Indoor/Cabin	Indoor/Cabin	Outdoor	Indoor/Cabin
Diameter	350 mm	350 mm	370 mm	340 mm
Mounting	Std ¾" tapered shaft	Std ¾" tapered shaft	Std ¾" tapered shaft	Std ¾" tapered shaft

* Does not apply to the Sport Mahogany steering wheel.

Hydraulic Steering

The strength required to steer a boat equipped with a hydraulic steering system is inversely proportional to the number of turns of the wheel lock-to-lock. The wheel turns are determined by the ratio between the cylinder volume, the pump displacement and the free movement of the steering device, e.g. the rudder. A large cylinder volume and small pump displacement results in a greater number of wheel turns and a small cylinder volume and a large pump displacement results in less number of wheel turns.

Fewer wheel turns means quicker steering response but more effort needed and more wheel turns means slower steering response but less effort. The Hydraulic Steering Helm pumps are available in three different displacement sizes, i.e. 28 cc, 33 cc and 39 cc. Each of them are available for three different ways of mounting, i.e. front mount, rear mount and tilt mount. Three steering cylinders are available, all for rudder installations, and comprising volume 116 cc, 168 cc and 215 cc respectively.

Adjustable steering wheel

The tilt mechanism allows for five locking positions in the range of 48 degrees (+/- 24 degrees) tilt angle of the Steering Wheel. With the tilt steering mechanism, the boat driver can choose the best personal steering wheel angle.

Hydraulic Steering

Part no	Displ./rev	Max. wheel dia.	No. of pistons	Pump	Relief valve setting	Weight, kg	
22275070	28 cc	711 mm	5	Front mount helm pump	70 bar	5 kg	
22275071	33 cc	711 mm	7	Front mount helm pump	70 bar	5 kg	
22275072	39 cc	711 mm	7	Front mount helm pump	70 bar	5 kg	
22275073	28 cc	711 mm	5	Rear mount helm pump	70 bar	5 kg	
22275074	33 cc	711 mm	7	Rear mount helm pump	70 bar	5 kg	
22275075	39 cc	711 mm	7	Rear mount helm pump	70 bar	5 kg	
22275076	28 cc	508 mm	5	Tilt mount helm pump	70 bar	5 kg	a)
22275077	33 cc	508 mm	7	Tilt mount helm pump	70 bar	5 kg	a)
22275078	39 cc	508 mm	7	Tilt mount helm pump	70 bar	5 kg	a)
22299003				Tilt mechanism			

a) Requires the tilt mechanism, which has to be ordered separately.

Steering cylinders for hydraulic steering

Part no	3/8" (9,5 mm) fittings	Output force	Stroke	Torque	Volume, cm^3
3809981	For high pressure flexible hose	455 kg	178 mm	53 kgm	116
3809982	For high pressure flexible hose	682 kg	178 mm	87 kgm	168
3809983	For high pressure flexible hose	682 kg	228 mm	111 kgm	215

Connecting kit, etc.

Part no	Description
1140584	Hydraulic high pressure flexible nylon hose 3/8"
192618	Air bleed hose
3809446	Hydraulic oil, 1 litre

Tie bar

For double engine installations. Conforms with the EN 28848 standard of the Recreational Craft Directive (94/25/EC). Conforms with the ABYC P22 Safety standards for Steering Wheels

Part no	CC between engines	Fits drive
3841706	660-1040 mm	SX/DP-S
3841707	840–1220 mm	SX/DP-S
3594639	1000–1240 mm	DPH/DPR

Mechanical Steering

The mechanical steering helms are available in four models, all using a Planetary Gear Design with three satellite gears that rotate on their axis and at the same time rotate around the central helm axis. This design provides an optimum reduction ratio with a minimum of physical effort, increased efficiency and less torque feedback compared to cheaper single pinion gear helms.

No feedback helms

A special patented device allows the helm shaft to lock until turned by the driver, maintaining the boat direction and neutralizing the feedback loads on the steering cable. The mechanism is engaged when the driver applies pressure on the wheel to change direction of the boat.

Image	Part no	Description	
2	3818019	Rear mount planetary helm gear	a)
2	21580930	Rear mount planetary helm gear, No-Feedback	a)
1	3818025	Planetary helm gear for tilt mount	b)
1	3818027	Planetary helm gear, No-Feedback for tilt mount	b)
4	21580825	Bezel kit - for 90° mounting, black	
	3818096	Bezel kit - for 70° mounting, black	
	3883509	Bezel kit - for 90° mounting, white	
3	3883508	Bezel kit - for 70° mounting, white	
1	22299003	Tilt mechanism	

a) Requires a bezel kit for the installation. Has to be ordered separately.
b) Requires the tilt mechanism, which has to be ordered separately.

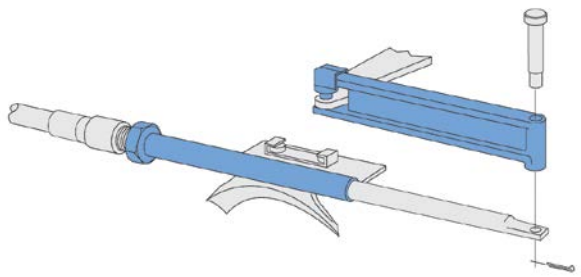

Steering cable attachment

This steering cable attachment is used to attach the steering cable on DP-E drives without power steering.

Part no
872388

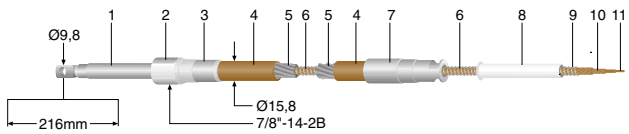

Steering cable

Volvo Penta steering cables are high quality products designed to provide optimum efficient performance, i.e., a minimum of physical effort with a minimum of play.

1. Telescopic sleeve
2. Connection nut
3. End sleeve
4. Protective outer sheathing in brown HD polyethylene
5. Hardened steel wire armature
6. Inner cable
7. End sleeve
8. Protective sleeve in white HD polyethylene
9. Spring steel covering
10. 36 strand steel wire – laid to left and right
11. Core wire

Part no	Cable length, m
3848176	2.00
3848177	2.25
3848178	2.50
3848179	2.75
3848180	3.00
3848181	3.25
3848182	3.50
3848183	3.75
3848184	4.00
3848185	4.25
3848252	4.50
3848253	4.75
3848254	5.00
3848255	5.25
3848347	5.50

Part no	Cable length, m
3848348	5.75
3848349	6.00
3848350	6.25
3848351	6.50
3848352	6.75
3848353	7.00
3840265	7.25
3848355	7.50
3840267	7.75
3848357	8.00
3848358	8.25
3848359	8.50
3848360	8.75
3848517	9.00

BOAT TRIM SYSTEM

The Boat Trim System (BTS) with its patented interceptor technology gives you perfect control over pitch and heel with rapid response, quicker onto plane, lower fuel consumption and a more comfortable ride. Even better, add the Automatic Boat Trim option which takes over the task of keeping the boat correctly trimmed - automatically!

This trim system is a perfect match for almost all planing boats in the range of 17 to 40+ feet. Outboard, sterndrive or inboard does not matter, it's compact design make for an easy installation. The kits come with a comprehensive installation guide which mean upgrading from conventional trim tabs is a small job.

You get

- Improved fuel efficiency.
- Greater lift and less drag compared with conventional trim tabs.
- Quickly onto the plane.
- Intuitive, user-friendly control panel.
- Automatic Boat Trim functionality (option)

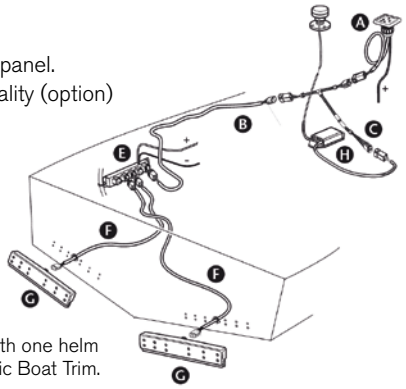

Single installation with one helm station and Automatic Boat Trim.

BTS 300 mm kit, Part no 21914554	
2 Interceptor units, 300	2 x 22656800
1 Control panel	1 x 21809318
1 Control unit	1 x 21546221
2 Cables, 2,5 m	2 x 3817171
1 Cable, 5 m	1 x 874789

BTS 450 mm kit, Part no 21914555	
2 Interceptor units, 450	2 x 22656801
1 Control panel	1 x 21809318
1 Control unit	1 x 21546221
2 Cables, 4 m	2 x 3817172
1 Cable, 9 m	1 x 889551

Automatic Boat Trim kit, Part No. 21561103 ***	
1 GPS receiver	1 x 3847459
1 Attitude control unit	

Ordering and component guide

	Description	Part no	1 helm station					2 helm stations*				
	Mandatory components		2x300	2x450	2x300+ 2x450	4x300	4x450	2x300	2x450	2x300+ 2x450	4x300	4x450
A	Control panel	21809318	1	1	1	1	1	2	2	2	2	2
B	6-pole cable (select length)		1	1	1	1	1	1	1	1	1	1
	5 m	874789										
	7 m	889550										
	9 m	889551										
	11 m	889552										
	13 m	888013										
C	6-pole Y-cable	3588972						1	1	1	1	1
D	6-pole extension cable (select length)							1	1	1	1	1
	1,5 m	3889410										
	3 m	3842733										
	5 m	3842734										
	7 m	3842735										
	9 m	3842736										
	11 m	3842737										
E	Control unit	21546221	1	1	1	1	1	1	1	1	1	1
F	4-pole cable (select length)		2	2	4	4	4	2	2	4	4	4
	2.5 m	3817171										
	4.0 m	3817172										
G	Interceptor unit 300 mm	22656800	2		2	4		2		2	4	
	Interceptor unit 450 mm	22656801		2	2		4		2	2		4
	Optional component											
H	Automatic Boat Trim ***	21561103	1	1	1	1	1	1	1	1	1	1
	Resettable breaker 8A **	966689	2	2	2	2	2	2	2	2	2	2

* **Note**! For each extra helm station (max 4 helm stations possible), add one control panel (A), one 6-pole Y-cable (C) and one 6-pole extension cable (D).

** **Note**! If the boat does not have a separate fuse box accessible, Volvo Penta resettable 8A breaker may be used. 966689 is not ignition proof and must therefore not be used in gasoline engine rooms.

*** **Note**! For the installation one 6-pole Y-cable (C) is always needed. Depending on installation type, there might be a need for a 6-pole extension cable (D). The 6-pole cable on the Attitude control unit (H) is approx. 25 cm.

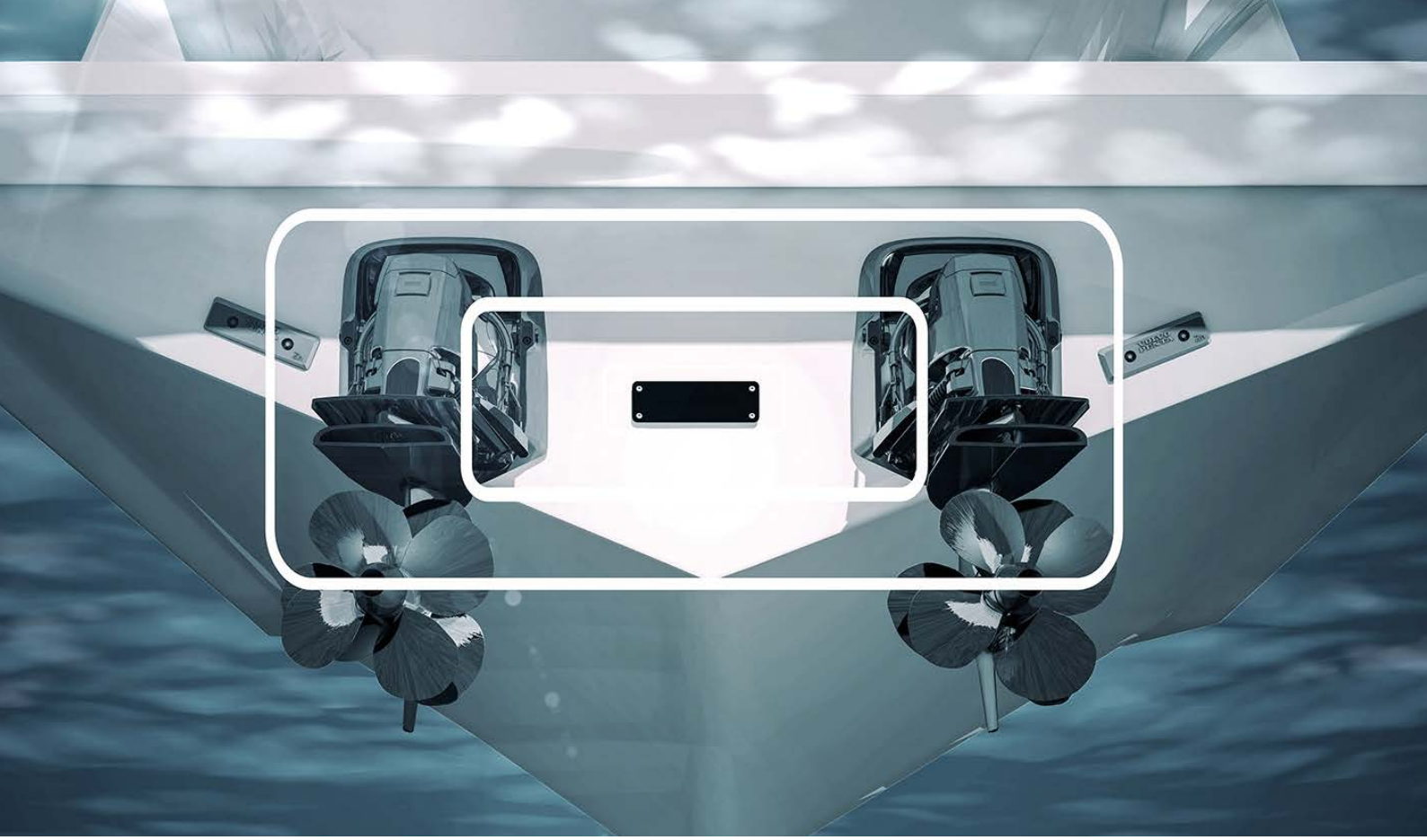

ACTIVE CORROSION PROTECTION

Volvo Penta Active Corrosion Protection (ACP) provides easier ownership and enhanced corrosion protection for your drive, compared to using conventional sacrificial anodes. The system continuously measures the electrical potential of the drive and, if needed, uses impressed currents to protect the drive.

ACP for Aquamatic Sterndrives

The system is available both for single and twin installations and gives ideal corrosion protection – in both brackish and salt water. The system replaces the need for sacrificial anodes on the drive.

Easy to use

The system is fully automated and EVC integration means that the protection status is continuously monitored and presented in the engine displays at the helm. No extra displays are needed and no need to worry about sacrificial anodes; the solution provides additional peace of mind.

Requirements

- Drives: DPH, DPS, SX, OX, FWD or DPR
- Electronic Vessel Control (EVC) generation C2 and later
- EVC displays: 2,5", 4", 7" or Glass Cockpit
- Fiberglass hull

A complete package

The Active Corrosion Protection system consists of a control unit, a transom unit and back-up sacrificial zinc anodes (one per drive).

It is delivered with all components needed including installation instructions and operator's manual. Cables can be routed upwards along the transom and enter through hull above the water line.

Part no	Application
23025862	Single installation
23254031	Twin installation

HOW DOES IT WORK?

The ACP system is using the impressed current cathodic protection (ICCP) principle to protect the drive. It constantly monitors the electrical potential of the drive and carefully adjusts the current output via the transom unit to keep the drive within safe potential levels. Compared to conventional sacrificial anodes, the main benefits of an active system are better control of the level of protection, visibility of the protection status at the helm and, of course, that no anodes are consumed while the system is active.

Although the system usually operates at much lower effect levels, it has the capability to output a current of up to 1 A to protect the drive and it is therefore recommended to have shore power connected while berthed. When shore power is not available, the system will switch and the auxiliary battery will be used. If the battery load level drops below 75%, the system will enter a monitor only mode where the protection status can be viewed at the helm but protection will be provided by the back-up sacrificial anodes. Below 50% battery load level, the system will be inactive and again rely on the back-up anodes.

ACP for Volvo Penta IPS

The system is available for all configurations and gives ideal corrosion protection for the drive and propeller – in both brackish and salt water. The system replaces the standard transom mounted sacrificial anodes.

Easy to use

The system is fully automated and EVC integration means that the protection status is continuously monitored and presented in the engine displays at the helm. No extra displays are needed and no need to worry about sacrificial anodes; the solution provides additional peace of mind.

Requirements

- Drive: Volvo Penta IPS
- Electronic Vessel Control (EVC) generation C2 and later
- EVC displays: 2,5", 4", 7" or Glass Cockpit
- Fiberglass hull

A complete package

The ACP system consists of a control unit, a transom unit with active and back-up sacrificial zinc anodes.

It is delivered with all components needed including installation instructions and operator's manual. Note: extra bonding cable needed for Triple and Quad installations.

Part no	IPS 1	IPS 15	IPS 2	IPS 3
Twin	22037078	22037078	22037078	22037078
Triple	22037078	22037078	22564286	22564286
Quad	22037078	—	22564286	22564286

Part no	Description
21200402	Bonding cable, between IPS-units. Order one for Triple installations and two for Quad installations.

ACP-S for sterndrives and outboards

This is a stand alone system designed for sterndrives and outboards in general. It has a lower capacity than the EVC integrated systems and complements the standard sacrificial anodes rather than replacing those. It is not recommended for DPH drives or larger outboards.

The ACPS is designed to protect one sterndrive or outboard, and an additional kit is required for installation on a twin engine boat.

Requirements

- Fiberglass hulls used in salt water.
- 12 V Electrical system

Part no	Drive
3587839	Sterndrives (not DPH) and outboards
3887090	SX-A, DPS-A

The system comes complete with wiring and detailed installation instructions. Standard tools, a drill and suitable underwater sealant are all that is required for most installations.

ENGINE ACCESSORIES

Volvo Penta engines are recognized all over the world as technically sophisticated and reliable marine engines.

Every accessory is a part in a system. They are all designed and developed to work together. All accessories fulfill our tough demands of durability and reliability. They are tailor made designed for easy mounting to engine and drive, eliminating complicated adaptations and tested as carefully as the engine.

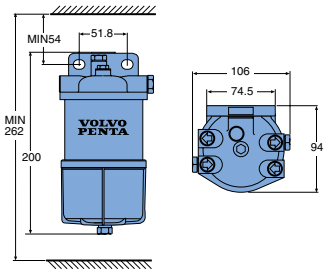

Fuel filter/water separator, diesel engines

Fuel filter/water separator for small diesel engines. The filter is intended for installation between the fuel tank and the engine. The filter is supplied without connection parts for the fuel lines (see "Fuel line fittings").

Part no
877766

Filter element for 877767 and 877766

Part no
3581078

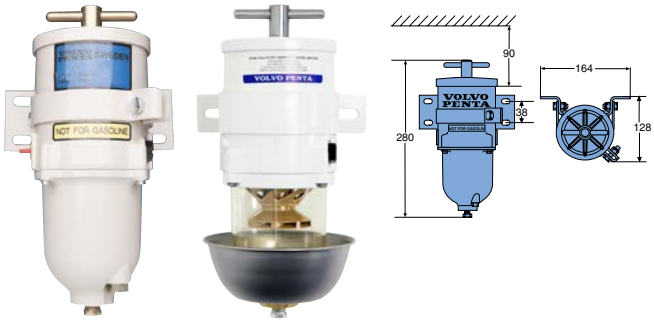

Fuel filter/water separator, diesel engines

The filter is intended for installation between the fuel tank and engine. Three progressive stages – separation, coagulation and filtration ensure that fuel arrives at the engine free from contamination. The filter is prepared for connection of a water alarm.

The filter is supplied without connectors or union nuts for fuel line connection (see "Fuel line fittings").

Weight: 2 kg

Flow, max.: 227 l/hour

Degree of separation: 10 micron

Initial pressure drop at max. fuel flow, 10 micron filter element: 4.1 kPa

Recommended filter: Replaceable filter element 861014, 3581760.

Part no	Discription
877763*	white metal bowl
22677639*	see through bowl

* Complies with applicable parts of RCD 2013/53/EU Harmonized standard EN ISO 10088. Complies with Classification Society requirements for fuel systems for propulsion engines.

Filter element for 877762, 877763, 877764 and 22677639

Part no	Micron
861014	10
3581760	30
1147147	2

FUEL SUPPLY

A reliable supply of clean fuel to the engine. Nothing is more important for reliability and safety at sea.

Water in Fuel Alarm

To get an early warning for water in the fuel tank the best position for a water sensor is in the Fuel Filter/Water separator between the tank and the engine. The sensor will detect water in the bowl of the water separator and give the early warning wanted.

Water in Fuel Alarm (D3, D4 and D6)

For D3-D6 engines a new sensor is developed that e.g. fits fuel filter / water separator 877763, 877768 & 877764. The sensor is connected to the EVC system and will give you the alarm in your EVC instrumentation. It also works in parallel in an existing engine-mounted 'water in fuel' alarm.

The kit fits D3/D4/D6 engines produced 2011 and later (which have paired engine cable harness). For 12 V or 24 V systems.

Part no
21641493

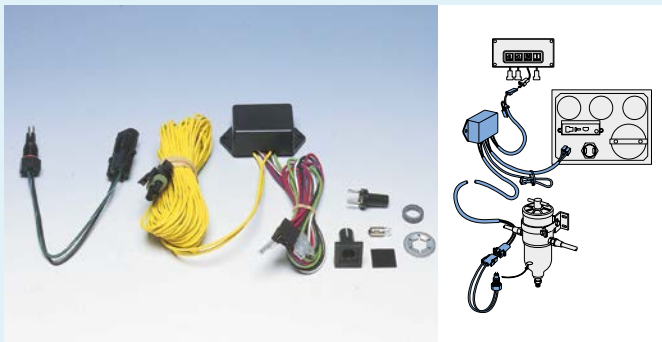

Water in Fuel Alarm (Stand-alone)

When detecting water the system will warn with both a warning lamp and audio signal (buzzer).

Suitable for use in conjunction with fuel filters/water separators 877762, 877769, 877768, 877770, 877763, 877771, 889280. For 12 V or 24 V systems.

Part no
1140724

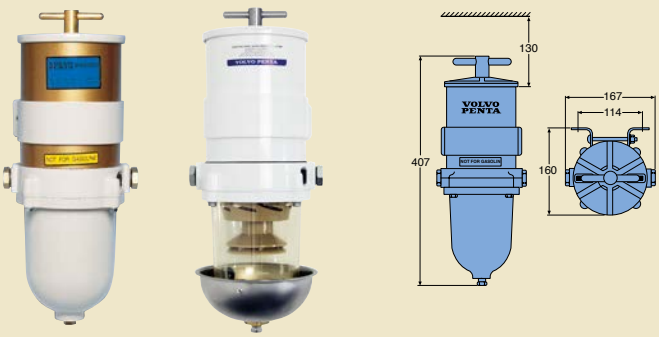

Fuel filter/water separator, diesel engines

For heavier diesel engines used in demanding environments with inconsistent fuel quality. Three progressive stages – separation, coagulation and filtration ensure that fuel arrives at the engine free from contamination.

All metal filter. Filter is adapted for connecting to water alarm. Complies with US Coast Guard standards for 2.5 minutes fire resistance in open flames. The filter is supplied with a 10 micron filter element, but without connectors or union nuts for fuel line connection (see "Fuel line fittings").

Weight: 3 kg

Flow, max.: 341 l/hour

Degree of separation: 10 micron

Initial pressure drop at max. fuel flow, 10 micron filter element: 2.3 kPa

Recommended filter: Replaceable filter element 3838852 and 889419

Part no	Description
877768*	white metal bowls
22677640*	see through bowls

* Complies with applicable parts of RCD 2013/53/EU Harmonized standard EN ISO 10088. Complies with Classification Society requirements for fuel systems for propulsion engines.

Filter element for 877769, 877768 and 22677640

Part no	Micron
3838852	10
889419	30
889421	2

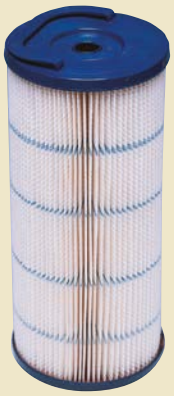

Filter element for 877771, 889280 and 889281

Part no	Micron
3838854	10
889422	30
889425	2

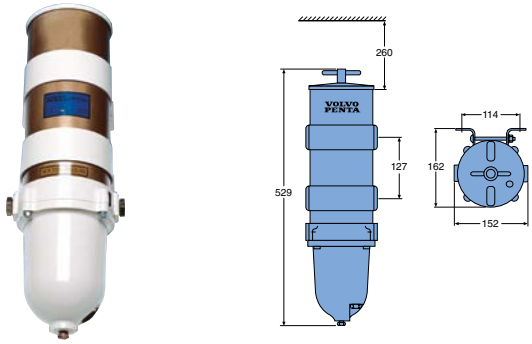

Fuel filter/water separator, diesel engines

For heavier diesel engines used in demanding environments with inconsistent fuel quality. The filter is intended for installation between the fuel tank and engine. Three-stage filtration – centrifugal separation, coagulation and filtration. Water and impurities are collected in the bowl beneath, from which they can be drained off by means of a drain valve.

All metal construction. Complies with US Coast Guard requirements for fire resistance on exposure to naked flame for 2.5 minutes. Filter is adapted for connecting to water alarm. Filter is supplied with a 10 micron filter element, but without connectors for fuel line connection (see "Fuel line fittings").

Weight: 5 kg

Flow, max: 681 l/hour

Degree of separation: 10 micron

Initial pressure drop at max. fuel flow, 10 micron filter element: 3.4 kPa

Recommended filter: Replaceable filter element, 3838854 and 889422

Part no
877771*

* Complies with applicable parts of RCD 2013/53/EU Harmonized standard EN ISO 10088. Complies with Classification Society requirements for fuel systems for propulsion engines.

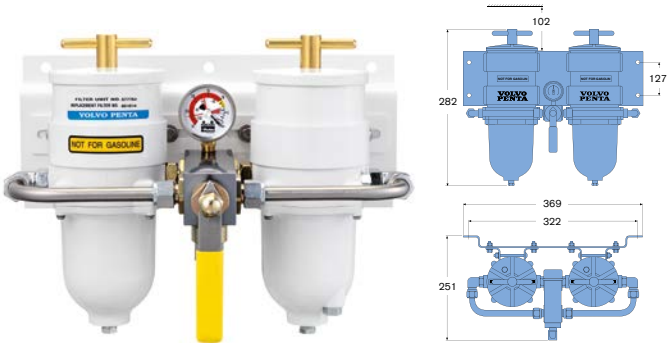

Double fuel filter/water separator, diesel engines

Weight: 7.7 kg

Flow, max.: 454 l/hour

Degree of separation: 10 micron

Initial pressure drop at max. fuel flow, 10 micron filter element: 4.83 kPa

Recommended filter: Replaceable filter element 861014

Fuel port connection 3/4"-16 UNF

Part no
877764*

* Complies with applicable parts of RCD 2013/53/EU Harmonized standard EN ISO 10088. Complies with Classification Society requirements for fuel systems for propulsion engines.

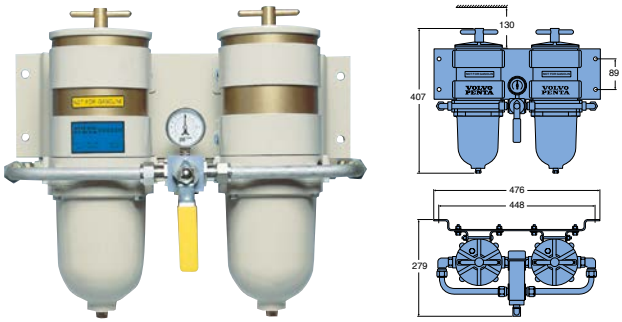

Double fuel filter/water separator, diesel engines

For heavier diesel engines used in demanding environments with inconsistent fuel quality.

All metal double filter with pressure gauge showing the pressure drop. Connections can be made between left hand, right hand or both filters, thus making it possible to change filter elements with the engine running. The filter thereby complies with Classification Association standards for propulsion engine fuel systems as well as the US Coast Guard standards for 2.5 minutes fire resistance in open flames.

Filter is adapted for connecting to water alarm. The filter is supplied with a 10 micron filter element, but without connectors or union nuts for fuel line connection (see “Fuel line fittings”).

Weight: 10.4 kg

Flow, max.: 682 l/hour

Degree of separation: 10 micron

Initial pressure drop at max. fuel flow, 10 micron filter element: 12.4 kPa

Recommended filter: Replaceable filter element 3838852 and 889419

Part no
877770*

* Complies with applicable parts of RCD 2013/53/EU Harmonized standard EN ISO 10088. Complies with Classification Society requirements for fuel systems for propulsion engines.

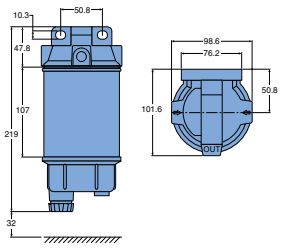

Extra fuel filter, petrol engines

The filter element is of the disposable spin-on type. The filter is supplied with a 10 micron filter element, but without connectors or union nuts for fuel line connection (see “Fuel line fittings”).

Weight: 0.9 kg

Flow, max: 227 l/hour

Degree of separation: 10 micron

Recommended filter: Replaceable filter element, 857633

The product fulfils the requirements of Recreational Craft Directive 94/25/EC.

Part no
877765*

* Complies with applicable parts of RCD 2013/53/EU Harmonized standard EN ISO 10088.

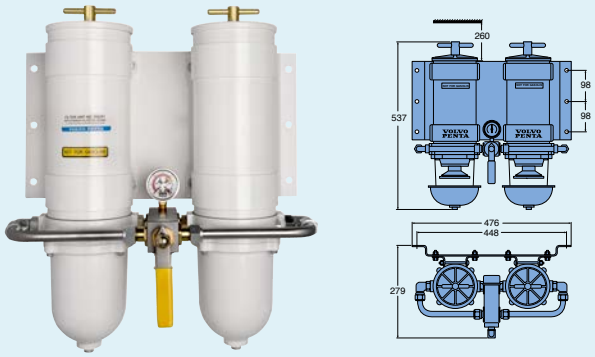

Fuel filter/water separator - twin diesel engines

For heavier diesel engines used in demanding environments with inconsistent fuel quality. Twin filter with gauge that indicates pressure drop. Transparent bowls fitted with heat shields. Can be connected to right, left or both filters to allow filter replacement while running.

Complies with classification body requirements for fuel systems for propulsion engines. Also complies with US Coast Guard requirements for fire resistance on exposure to naked flame for 2.5 minutes. The filter is supplied with a 10 micron filter element, but without connectors for fuel line connection (see “Fuel line fittings”).

Weight: 11.3 kg (Metal bowls: 13.6 kg)

Flow, max: 1363 l/hour

Degree of separation: 10 micron

Initial pressure drop at max. fuel flow,

10 micron filter element: 24.1 kPa (Metal bowls: 25.5 kPa)

Recommended filter: Replaceable filter element,

3838854 and 889422

Part no	Description
889280*	see through bowls
889281**	white metal bowls

* Complies with applicable parts of RCD 2013/53/EU Harmonized standard EN ISO 10088

** Complies with applicable parts of RCD 2013/53/EU Harmonized standard EN ISO 10088. Complies with Classification Society requirements for fuel systems for propulsion engines.

Filter element for 877765

Spin-on disposable filter, 10 micron.

Part no
857633

Fuel Hose

High quality fuel hose for commonly available fuels such as diesel, biodiesel, gasoline and ethanol based fuels. Inner tube of FPM (Fluorinated Propylene Monomer), middle tube of ECO and a CSM cover. This gives it the capability to handle e.g. biodiesel, very low permeability and the ability to withstand high temperatures (-40°C to +120°C).

Fire resistant according to ISO7840 and ISO15540/15541. Type approved by D.N.V. and M.E.D certified (Wheelmarked).

Supplied per metre.

Part no	Int. Ø, mm	Ext. Ø, mm
3830315	9,5	16,5

Fuel hose

Fuel hose, fire resistant in accordance with ISO7840-A1 and J1527 USCG type 2. Internal diameter 3/8". Supplied per metre. Recommended stainless steel hose clips, part no. 961664.

The product fulfils the requirements of Recreational Craft Directive 94/25/EC.

Part no	Int. Ø
861057	Fuel hose 3/8" (9,5 mm)

Fuel level sensor

The fuel level sensor provides an all-in-one solution for the fuel tank. Level sensor, fuel in- and outlet ports for main engine, in- and outlet ports for diesel heater, de-aeration and fuel pickup / return pipe all integrated in one package. The bayonet fitting means it is easy to install together with our service hatch. NMEA connection for fuel level, 240 - 30 ohm (empty to full). M18 connections for fuel outlet port and M16 for fuel return port.

Part no	Length*
22682855	472 mm
22682856	527 mm
22682858	627 mm
22682859	676 mm

* Length from top of inside tank to bottom of level sensor

Service hatch

A service hatch designed with a laser cut bayonet hole for easy installation of the level sensor. Made of electro polished stainless steel with a 38 mm fuel fill connection. Delivered as a kit including screws, gaskets, flange and installation instruction. Volvo sealant 1161099 needs to be ordered separately.

Part no
22548277

Part no: 877763

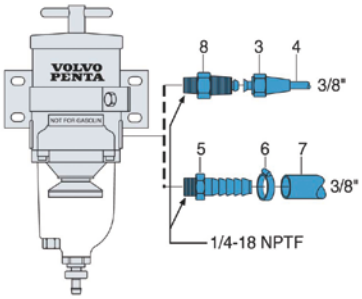

Part no: 877768, 877769

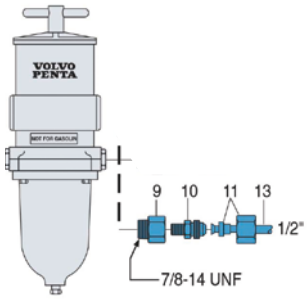

Part no: 877770, 889280, 889281

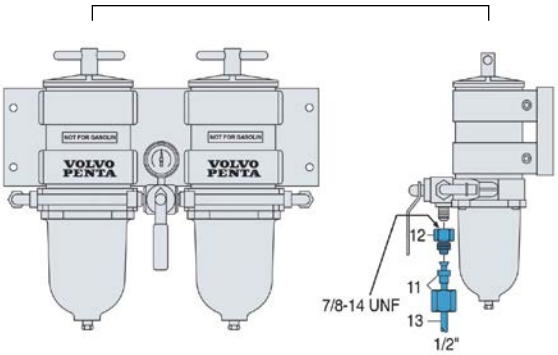

Part no: 877771

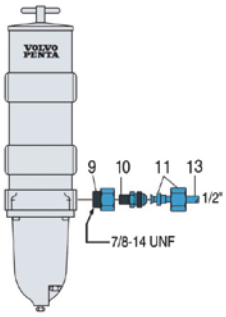

Part no: 877766

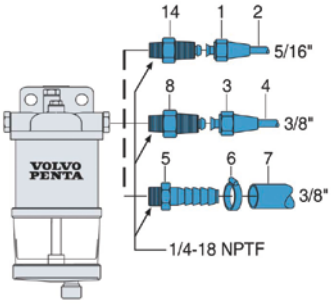

Part no: 877765

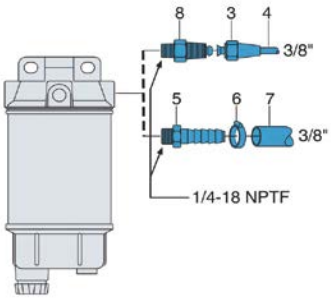

Fuel line fittings

Part no	No	Description
954322	1	Union nut 5/16"
954305	2	Copper pipe 5/16"
954323	3	Union nut 3/8"
1140062	4	Copper pipe 3/8", 25 m
3825000	5	Hose connector
961664	6	Hose clamp
861057	7	Fuel hose 3/8"
954337	8	Connector 3/8"
3825034	9	Adapter fitting
3825512	10	Connector 1/2"
3825513	11	Union nut 1/2"
3825511	12	Adapter fitting
-	13	Copper pipe 1/2", not stocked by Volvo Penta
190962	14	Connector 5/16"

EXHAUST SYSTEM

Complete systems with silencers, hoses, elbows and everything else needed. Perfectly in tune with the respective engine series.

The water-cooled system has a number of advantages:

- Low exhaust pipe temperature allows the use of rubber hoses.
- Extremely effective silencing of exhaust noises.
- Compact size and low weight.

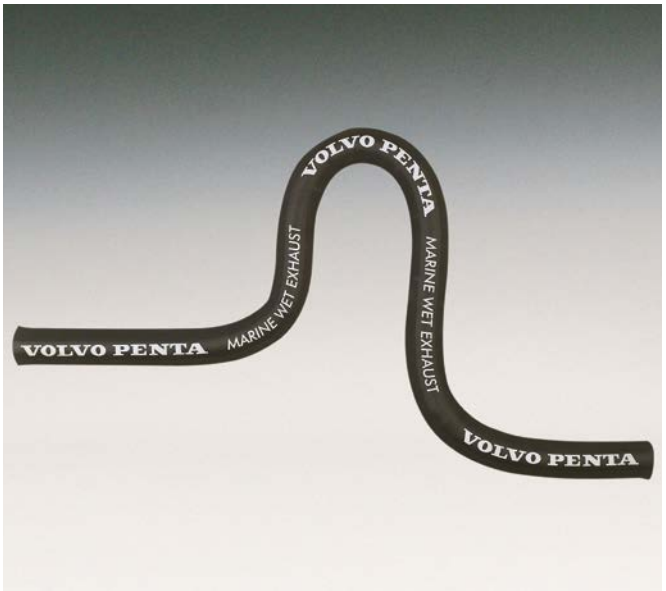

Rubber exhaust hoses

An flexible exhaust hose for marine wet exhaust systems that conforms with ISO13363 type 2 (+580°C) and SAE J 2006 type R2. It's minimized bend radius means easy and quick installation. Reinforced by synthetic textile layers and embedded steel wire helix it has plain and smooth inner surface for minimum exhaust back pressure. Smooth outer surface. Sold per meter.

Part no	Min. bend radius mm	Rec. stainless steel hose clips	Int. Ø, mm	Ext. Ø, mm
1140664	200	961669	32	41.5
1140665	285	961671	45	55
1140670	305	961672	50	61.5
1140666	310	961673	57	69
1140671	355	961674	63	75
888212	455	22274886	76	88
1140667	535	22274887	89	101
1140668	610	22274888	102	115
1140669	760	3817828	127	140
1140672	950	3595350	152	165
1140673	1200	21609813	205	217

Elbow coupling, wet exhaust systems

The elbow coupling provides an improved installation and reduces the risk of a kink forming in the exhaust hose.

Material: Stainless steel with pre-formed collar for hose connection.

Part no	Angle, degrees	Ext. Ø, mm
828256	45	45
828255	45	57
843287	45	89
872017	45	100
872024	90	100

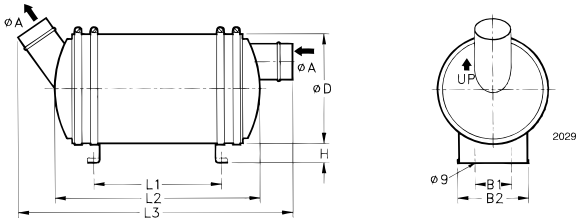

Silencer, wet exhaust systems

The silencer effectively silences engine exhaust noise with a minimum of back pressure. The silencer also functions as an effective water-lock. Its large capacity for cooling water eliminates the risk of water siphoning back into the engine when stopped. Adjustable mounting brackets make the silencer easy to install.

Material: Reinforced rubber with acid resistant stainless steel end pieces.

Part no	ØA	ØD	B1	B2	H	L1	L2	L3	Hose dia.	
828064	45	165	60	112	30	208	334	440	45 mm	
828837	45	165	60	112	30	208	334	440	45 mm	a)
838327	57	165	60	112	30	408	535	645	57 mm	
842768	89	220	90	140	40	370	500	665	89 mm	
854760	100	218	90	114	40	375	450	500	100 mm	a)

a) Horizontal exhaust exit suitable for installations with limited height.

Through-hull exhaust fitting

Through-hull exhaust fitting with drip-edge to prevent cooling water from discolouring the side of the hull. With pre-formed collar for hose connection. Supplied complete with hose clips.

Part no	Material	Ext. Ø, mm
828295	Aluminium	89
854754	Stainless steel	100
833738	Brass	45
831781	Brass	57

Exhaust temperature alarm, wet exhaust systems

The temperature alarm sensor is installed in the exhaust hose and transmits a signal to a warning lamp in the event of excessive exhaust temperatures as a result of water shortage.

Includes: Sensor, cables.

Part no	Fits engine
877773	MD2010-2040, D1-13-D2-75

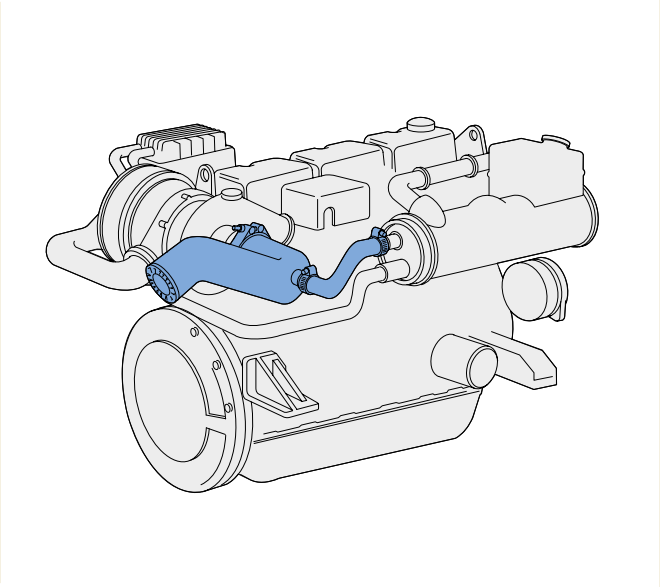

Exhaust riser

An exhaust riser raises the level of the exhaust elbow. This is installed on vessels with engine installations at or below the water line. The riser reduces the risk of siphonage back into the engine via the exhaust system.

Part no	Height
3884165	100 mm/4"
40005141	150 mm/6"
40005142	150 mm/6"
3886142	75 mm/3"
3888846	75 mm/3"
3581031	-
861097	100 mm/4"
861252	90 mm/3.5"
3862907	150 mm/6"

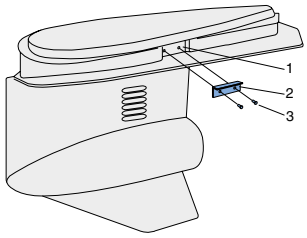

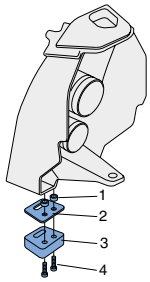

Exhaust cover kit

In order to comply with strict regional noise limitation requirements, Volvo Penta has developed exhaust cover kits for shields and drives. The kits are intended for 3.0 and 4.3 petrol engines with SX drive.

Exhaust cover for shield

Note! Delivered as standard in later versions of 3.0 GS/SX.

Includes: Spacer, cover, screws.
Anode is also needed (not part of the kit).

Part no
3858758

Exhaust cover for drive

Note! To be used only in combination with exhaust cover kit for shield, 3858758.

Includes: Exhaust port, rivets (2 per side), exhaust cover (1 per side).

Part no
3856171

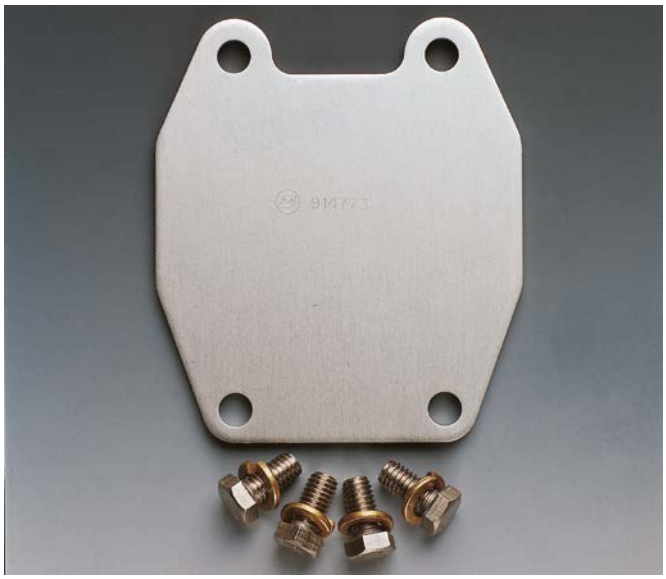

Exhaust block-off kit

The standard exhaust fitting for I/O-engines leads the exhaust through the drive. If a separate silencer is required, then the exhaust port in the transom shield must be sealed.

Includes: Cover plate, fittings.

Part no	Drive
3850889	SX/DP-S

CHEMICALS

Using high-quality chemicals is important to ensure maximum performance, wear protection and reliability. That's why Volvo Penta offers a range of high-quality products, specifically developed and tested to meet our exact specifications and stringent requirement – making them the best choice for maintenance and repair of Volvo Penta products.

VOLVO PENTA OILS

We invest significant resources together with the Volvo Group to develop high-performance oils. And the reason is simple. As engines continue to evolve, with increased efficiency, more precise technology and tighter tolerances, it leaves less space between components, placing greater demands on oil performance than ever before.

Volvo Penta oils are extensively tested and approved according to our high-quality demands. All Volvo Penta oils include powerful additive technology that is individually selected to optimize performance, reduce fuel consumption and provide maximum wear protection.

VDS-3 Engine oil

VDS-3 covers even more stringent requirements on piston cleanliness and bore polish compared to VDS-2, ensuring the durability and reliability of the engines. The high quality of VDS-3 oils allows in certain cases an increase in drain intervals. Fits both diesel and gas engines (check operators manual).

Viscosity: SAE 15W-40

Grade: VDS-3, API CI-4, ACEA E5

Part no	Pack	Quantity
22479638	Plastic bottle	1 Litre
22479642	Plastic cont.	5 Litre
22479643	Plastic cont	20 Litre

VDS-4.5 Engine oil

VDS-4.5 15W40 is uniquely formulated heavy-duty engine oil incorporating proprietary additive technology. It is recommended for use in modern diesel engines under all operating conditions and in all environments. Therefore, it is fully backwards compatible to work with all Volvo Penta engines where VDS-2, VDS-3 or VDS-4 oils were used. It is also recommended for certain gasoline engines, please refer to the operators manual.

Viscosity: SAE 15W-40

Grade: VDS-4.5 API CK-4 / CJ-4 / CI-4 Plus / CI-4/ ECF-3 / ACEA E9 / E7

Part no	Pack	Quantity
23039848	Plastic cont.	5 Litre
23039851	Plastic cont	20 Litre

Synthetic gasoline engine oil

A fully synthetic oil specially developed for high performance gasoline engines. Its wide temperature range capability maximizes engine life. The additive system is designed to provide protection against wear and minimize deposit and sludge build-up. Particularly suitable for all engines equipped with catalyst but is also applicable to non-catalyst engines produced in model year 2008 and later.

Viscosity: SAE 5W-40

Grade: ACEA C3, API SN

Part no	Pack	Quantity
23211287	Plastic bottle	1 Litre
23211288	Plastic container	5 Litre
23211290	Plastic container	20 Litre

Synthetic marine transmission oil

High-performance marine transmission oil designed to provide maximum protection for Volvo Penta IPS and Aquamatic sterndrives. Specifically formulated to offer excellent performance under extreme loads and temperatures while providing balanced frictional properties between grip and slip and maximum protection against wear and corrosion. Advanced additive technology include unique capability to minimize damage due to water contamination.

All this ensure significant advantages over conventional transmission oils and contributes to high-performance, smooth operation and long-term health of the drive.

Volvo Penta IPS/Aquamatic synthetic transmission oil

Part no	Pack	Quantity	SAE
22479650	Plastic bottle	1 Litre	75W-90
22479648	Plastic container	5 Litre	75W-90
22479647	Plastic container	20 Litre	75W-90

Synthetic transmission oil 75W-140*

Part no	Pack	Quantity	SAE
22574246	Plastic container	5 Litre	75W-140

* For DPH ratio 1.59:1 (D6-400) and DPG drives (KAD300).

Transmission oil

Lubrication properties protect drive and transmission even under heavy load. Also provides excellent corrosion protection. Withstands high temperatures without breaking down.

Grade: API GL-5

Part no	Pack	Quantity	SAE
3809445	Plastic bottle	5 Litre	80W-90

1

2

1. Hydraulic Oil

Protects against wear at high and low temperatures. Also provides excellent corrosion protection. Particularly suitable for marine use. Does not affect seal materials.

Viscosity: ISO VG 15

Part no	Pack	Quantity
22618337	Plastic bottle	1 Litre

2. Compressor oil

Specially tested in Volvo Penta compressors. Fully synthetic oil that withstands both high and low temperatures. Protects compressor against corrosion.

Viscosity: ISO VG 68

Part no	Pack	Quantity
85108974	Plastic bottle	250 ml

ATF-Oil

Protects against wear, even at high temperatures. Also provides a very good corrosion protection.

Note! Must not be used where API-GL5 is recommended.

ATF-oil, type Dexron III

Part no	Pack	Quantity
85122800	Plastic bottle	1 Litre
1161995	Plastic bottle	5 Litre

Electric oil drain pump

An electric oil drain pump makes essential oil changes considerably easier. The pump is permanently installed, thus eliminating the dirt and inconvenience of manually draining the sump. The pump is self-priming and is also suitable for flushing and as a bilge pump.

Note! Do not use the pump for pumping paraffin or petrol.

Part no	Voltage
843114	12 V
843410	24 V

Rapid rust loosener

A multi purpose spray with excellent penetration and contact properties. It loosens rust seized metal parts connections and other mechanisms without destruction. It removes moisture in electric contacts, protects from corrosion and oxidation. It eliminates squeaking and reduces friction.

Part no	Pack	Quantity
1161928	Spray can	400 ml

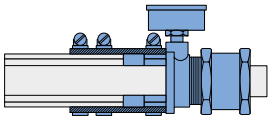

Propeller shaft grease

Propeller shaft grease is used for conventional packing boxes.

Viscosity: NLGI 3

Part no	Pack	Quantity
3809449	Plastic container	500 g

Grease

Special grease for marine environments – especially suitable for salt water applications. Lubricates, seals and protects against corrosion. Withstands long-term high loading without any deterioration in protective properties. The grease is solid and water-resistant, for use in rubber packing boxes, greasing propeller shafts, folding propellers and all other propeller components.

Viscosity: NLGI 2

Part no	Pack	Quantity
828250	Tube	25 g
22618330	Plastic cartridge for grease gun	400 g

3

4

3. Low temperature grease

A special grease recommended for low temperatures and loads. This grease is especially suitable for use on controls, hinges, lock parts and for greasing electric contacts, switches, etc.

Viscosity: NLGI 1

Part no	Pack	Quantity
1161417	Tube	30 g

4. Grease for Waterjet

For Waterjet K22 and K25. The grease can withstand high temperature peaks. Also provides excellent corrosion protection.

Viscosity: NLGI 2

Part no	Pack	Quantity
1161251	Plastic cartridge for grease gun	400 g

1. Liquid sealing agent – master gasket

Replaces conventional paper gaskets and provides an immediate "custom made" gasket. Resistant to petrol, oil, anti-freeze, transmission oils and solvents.

Part no	Pack	Quantity
22618325	Syringe applicator	25 ml

2. Sealant – gasket cement

A viscous and slow drying cement intended primarily for gaskets and similar. Dries to a pliable film.

Part no	Pack	Quantity
1161099	Plastic container	125 ml

3. Silicon adhesives – black

A single component black silicon adhesive that cures at room temperature. Suitable for both gluing and sealing operations where a strong elastic seam capable of withstanding temperatures from –65°C to +200°C is required. Excellent adhesion to metal, rubber, glass and most plastics. Prior to application, the surface to be treated must be cleaned and free from moisture. The silicon adhesive is resistant to oils, greases, solvents, etc.

Part no	Pack	Quantity
1161277	Plastic tube	20 g
1161231	Plastic cartridge for grease gun	310 ml

4. Sealant

A graphite based black sealant and rust-proofing agent for pipe joints, flanges, threaded connections on, for example, the exhaust system. Will not damage gasket materials even at high temperatures.

Part no	Pack	Quantity
591247	Metal tin	1 kg

5. Coolant VCS yellow

Yellow and green coolants may not be mixed.

Part no	Colour	Type	Quantity	
22567314	Yellow	Ready mixed	5 L	(to -25°C)
22567335	Yellow	Ready mixed	20 L	(to -25°C)
22567286	Yellow	Concentrated	1 L	
22567295	Yellow	Concentrated	5 L	
22567305	Yellow	Concentrated	20 L	

6. Coolant green

Yellow and green coolants may not be mixed.

Part no	Colour	Type	Quantity	
22567233	Green	Ready mixed	5 L	(to -25°C)
22567259	Green	Ready mixed	20 L	(to -25°C)
22567185	Green	Concentrated	1 L	
22567206	Green	Concentrated	5 L	
22567215	Green	Concentrated	20 L	

Coolant system cleaner

High engine temperature can be caused by build-up of deposits in the cooling system which occur, usually, after long running time or the use of mineral rich water. When this occurs the cooling system must be cleaned with the help of a cleaning agent. The cleaner is a citric acid based solvent with the addition of a neutraliser. For yellow VCS coolant only.

Part no	Pack	Quantity
21467920	Plastic container	500 + 200 g

Locking fluid

Protection fluid for screws and nuts. Permits removal in the normal manner. The protection fluid is effective on lightly oiled surfaces as well as preventing corrosion, leakage and vibration.

Part no	Pack	Quantity
85145750	Bottle	10 ml

Paints

Volvo Penta paints are the best protection against rust and corrosion for engines, drives and transmissions. The appearance and second hand values of the engine is enhanced if all painting operations are carried out using Volvo Penta paints.

Touch-up paint - engine

Part no	Colour	Pack	Quantity, Litres
22618341	Green, gloss	Tin	1.0
3808216	Red	Tin	1.0
22618344	Green, matt	Tin	1.0
22618302	White	Tin	1.0
1141566	Green, matt	Spray can	0.4
827501	Red	Spray can	0.4
3851221	Dark grey	Spray can	0.4

7 8 9 10 11 12 13 14 15

7–14. Touch-up paint - drive

Part no	Colour	Pack	Quantity, Litres	Image
1141567	Blue-grey	Spray can	0.4	7
1141575	Grey	Spray can	0.4	8
1141560	White	Spray can	0.4	9
1141568	Black, matt	Spray can	0.4	10
3851219	Silver, SX, DPS, FWD, IPS 1*	Spray can	0.4	11
827502	Clear varnish	Spray can	0.4	12
889968	Silver + clear varnish, DPG, DPH, DPR, S-drives, IPS**	Spray can, 2 pcs	0.4 + 0.4	13
3851220	Grey + clear varnish, DPX	Spray can, 2 pcs	0.4 + 0.4	14

* IPS 1 generation A, B, C (up to SN 3194009615) ** IPS 15, 2, 3, 30 and IPS 1 generation D and later (from SN 3194009616)

15. Primer

Part no	Colour	Pack	Quantity, Litres	Image
1141562	Blue-grey, for drive	Spray can	0.4	15

Bilge Oil Boom

The Bilge Oil Boom is ideal for keeping your bilge safe and clean. Simply drop or anchor (with attached rope) in the bilge and the Bilge Oil Boom will efficiently absorb waste oil , fuel and hydraulic fluid. Does not absorb water and will stay afloat even when soaked with oil.

Features:

- Super absorbent and hydrophobic, does not absorb water.
- Absorbs all kinds of petroleum spills.
- Absorbs up to 4.5 l.
- Boom is 380 x 130mm.
- 100% polypropylene absorbent surrounded by spunbond, polypropylene sock and nylon netting.

Part no
21699860

Oil & Water Sorbent Pads

The Oil & Water Sorbent Pads can be used for all engine and drive-related spills and leaks. Absorbs petroleum products, cooling liquid, water etc. You can even use it to wipe off the bilge after the work is done.

Features:

- Absorbs up to 0.7 l per pad.
- 400 x 500 x 4.7 mm
- Sold in a roll of 4 pads.
- Made from recycled polypropylene.

Part no
21699859

COOLING SYSTEM

The cooling system is an extremely important part of the engine assembly. A correct working temperature contributes to a longer operational lifespan of the engine and improved fuel economy. It is also important from a safety aspect. With a correctly dimensioned and correctly installed cooling system, overheating of the engine, unnecessary stoppages and expensive repairs due to engine failure, can be avoided.

COOLING SYSTEMS CAN BE OF TWO DIFFERENT TYPES:

Sea water cooled (direct cooling), where sea water is directly pumped into the engine's cooling system and subsequently discharged via the exhaust system (wet exhaust systems) or via a separate discharge point for cooling water (for dry exhaust systems).

Fresh water cooled (indirect cooling) where the engine has its own closed loop cooling system similar to that of a motor car. The temperature of the engine coolant is reduced by being passed through a heat exchanger which is itself cooled by a supply of continuously pumped sea water. The sea water is discharged either via the exhaust, when used with a wet exhaust system, or via a separate outlet, when used with a dry exhaust system.

Freshwater cooling has a number of advantages compared to sea water cooling, these being:

- Better comfort, i.e. availability of domestic hot water and onboard heating. More extensive usage.
- The anti-freeze and anti-corrosion agents contained within the coolant permit all year running. Should it be required to totally decommission the engine, the coolant channels can simply be filled with inhibitors.
- Reduced engine wear as a result of higher running temperatures.
- Extended engine life due to better corrosion protection.

It is a relatively simple operation to fit a fresh water cooling system to a sea water cooled engine.

SEA WATER COOLING

1. Exhaust bend, wet type
2. Engine cooling galleries
3. Vacuum valve
4. Sea water pump
5. Sea water filter
6. Cooling water intake
7. Hose

FRESH WATER COOLING

1. Exhaust bend, wet type
2. Engine cooling galleries
3. Vacuum valve
4. Sea water pump
5. Sea water filter
6. Cooling water intake
7. Hose
8. Heat exchanger
9. Expansion tank
10. Hot water outlet
11. Hot water heater

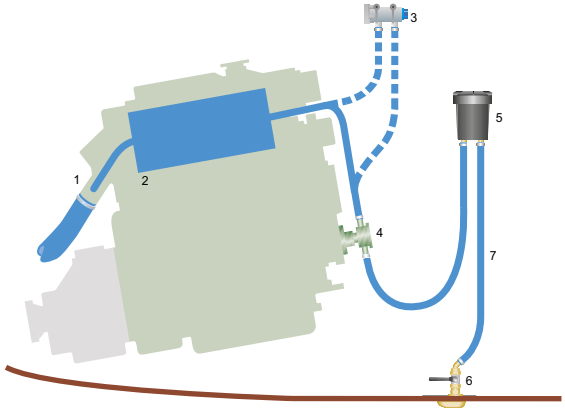

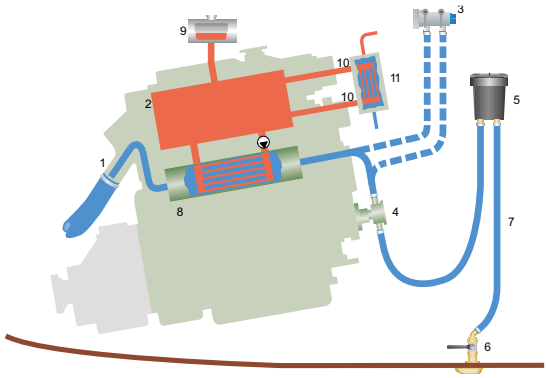

Vacuum valve

For vessels with an engine installation at or below the water line a vacuum valve should be installed. The valve prevents siphonage occurring through the seawater intake, resulting in water ingress to the engine.

Part no	Hose dia.
21662701	16 mm
21662702	19 mm
21662703	22 mm
21662704	25 mm

Seawater filter 32 mm

The seawater filter should be installed in the cooling system's suction line above the water line. The filter effectively separates any impurities from the seawater and contributes to extending the service life of the engine. The filter element is easy to clean.

Material: Plastic container and filter

Connection: In: 32 mm, Out: 32 mm

Height: 210 mm incl. hose connectors

Width: 130 mm

Depth: 130 mm

Rec. rubber hose: 1140664 (32 mm)

Part no
3583840

Seawater filter, heavy duty 50 mm

The filter has a large capacity suitable for use in extremely dirty or muddy waters. The filter element is easily cleaned and is covered with a transparent cover for ease of inspection.

Material: Plastic container and filter

Hose connection: Hose int. dia 50 mm

Height: 255 mm

Width: 220 mm

Depth: 200 mm

Volume: Approx. 2,7 litres

Rec. rubber hose: Part no. 1140670

Part no
21655254

Seawater filter, heavy duty 63 mm

The filter has a large capacity suitable for use in extremely dirty or muddy waters. The metal filter strainer is easily cleaned and is covered with a transparent cover for ease of inspection.

Material: Bronze casting with clear sight glass

Volume: Approx 5 liters

Hose connection: Hose int. dia 63 mm

Rec. rubber hose: Part no. 1140671

The kit contains: Filter, mounting brackets

Part no	Description
23226380	Seawater filter
21298806	Hose connection
961673	Hose clamp

Sea water filter cover

The transparent cover fits all seawater filters for D4 and D6 engines.

Part no
21400685

Hose adapters

For connection of seawater filter to cooling hoses of other diameters, cut adapter if necessary. Hose clamps for connection to filter included. Hose clamps for cooling hoses have to be ordered separately. One or two adapters are required for an installation.

Part no	Inner dia.	Outer dia.	Length
21951974	50 mm	32/38 mm	142/99 mm
21951975	32 mm	16/19 mm	87/62 mm

Expansion tank

A separate expansion tank for engine coolant can be installed in an easily accessible position and thereby make checking and filling of the system considerably easier. The tank is manufactured of a semi-transparent material to enable the checking of the coolant level.

Material: Plastic

Installation: Max 1.2 metres above the highest point of the engine.

Includes: Tank, pressure cap, fittings for installation.

Part no	Fits engine
3581427	2010-2040/MD22
3581297	MD31-42
3886264	D4-D6

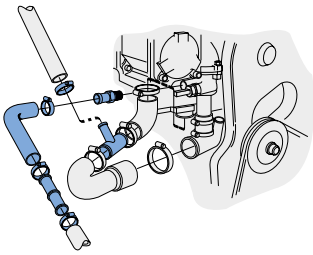

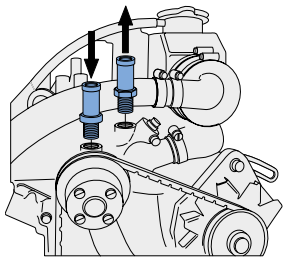

Hot water outlet

A hot water connection is made to the engine cooling system which allows the hot coolant water to circulate through a water heater. The hot coolant heats up the water contained in the water heater. This then provides a domestic hot water supply.

Recommended hose for engine/water heater:
Hose, int. diameter 16 mm, part no. 952969

Recommended stainless steel hose clips: part no. 961665

Recommended hose for domestic supply:
Hose, int. diameter 12.7 mm, part no. 952968

Recommended stainless steel hose clips: part no. 961665

Part no	Fits engine	
861523	MD2010-20A, MD2030-40, D2-55	
3856266	8.1Gi, DPX375, DPX420	a)
3862101	4.3GL, 5.0GL, 5.7GXi	b)
860706	AD31/41, KAD300/43/44, KAMD300/43, TAMD31/31S/41	c)
3581632	AMD22, TMD22, MD22	
3583734	KAD32	
3862102	8.1Gi, 8.1GXi	d)
40005450	4.3GL/GXi, 5.0GL/GXi, 5.7Gi/GiE/GXiE/GXi	
21177136	D9, D11	
3818029	8.1GiE/Gi/GXiE/GXi	
40005445	3.0GLP-J	
40005449	4.3GL/GXi, 5.0GL/GXiE/GXi, 5.7Gi/GiE/GXiE/GXi	
21145832	D4, D6	
21527832	4.3GL/GXiE/GXi, 5.0GXiC/GXiCE/GXiE/GXi, 5.7Gi/GiC/GiCE/GiE/GXi-CE/GXiE/GXi	
3588682	D3-130-190A	
3841173	D1-13-D2-40	

a) (For model year EF and later).8.1Gi/DP-S: Only for sea water cooled engine.

b) Only for raw water cooled engine. 4.3GL - A, 4.3GXi -A, B, BF, 5.0GL - A, B, 5.0GXi - A, B, BF, 5.7GL - A, B, 5.7Gi - A, B, BF, 5.7GXi - B, C, CF.

c) Also for KAD/KAMD42 engines

d) Only for raw water cooled engines. 8.1Gi - B, BF, 8.1GSi, 8.1GXi - A, AF, DPX375 - B, BF, DPX420 - B, BF.

Freshwater cooling kit

Part no	Fits engine
3860972	8.1Gi - B, BF, 8.1GSi, 8.1GXi - A, AF
3862181	4.3Gi (EF),4.3GL - A, 4.3GXi - A, B, BF, 5.0Gi, GSi, 5.7Gi, GSi (EF), 5.7GXi (EF), 5.0GL - A, B, 5.0GXi - A, B, BF, 5.7GL - A, B, 5.7Gi - A, B, BF, 5.7GXi - B, C, CF
40005807	4.3GL-J, 5.0GL-J
40005446	4.3GXiE-M, 4.3GXi-J, 5.0GXiE-M, 5.0GXi-J, 5.7Gi-300-J, 5.7GXiE-300-M, 5.7GXiE-M, 5.7GXi-J
3842763	8.1GiE-J, 8.1GiE-JF, 8.1Gi-J, 8.1GXiE-J, 8.1GXiE-JF, 8.1GXiE-M, 8.1GXi-J, 8.1GXi-JF
21403116	5.0 GXiC-J, 5.0 GXiC-JF, 5.7 GiC-300-J, 5.7 GiC-300-JF, 5.7 GXiC-J, 5.7 GXiC-JF, 5.7 GiCE-300-J, 5.7 GiCE-300-JF, 5.7 GXiCE-J, 5.7 GXiCE-JF, 5.7 GXiCE-300-M, 5.7 GXiCE-300-MF, 5.7 GXiCE-M, 5.7 GXiCE-MF
21403117	8.1 GiC-400-J, 8.1 GiC-400-JF, 8.1 GiC-400-Q, 8.1 GiCE-400-J, 8.1 GiCE-400-JF, 8.1 GiCE-400-M, 8.1 GiCE-400-MF, 8.1 GiCE-400-P, 8.1 GiCE-400-P.

Cooling water intake

The cooling water intake is a through-hull fitting with strainer, installed through the bottom of the hull. For motor boats the strainer should be directed forward. Once under way, the seawater is forced up into the system. However, for sailing boats, the strainer should be directed towards the rear of the boat in order to prevent seawater being forced into the system when under sail with the engine shut down. When a motor boat is being towed, the shut-off valve must be closed.

Includes: Through-hull fitting with strainer, fittings for pipe connection, shut-off valve, hose clips.

Part no	Internal hose diameter
861495	19 mm
861496	19 mm
1140129	32 mm
3587668	38 mm
1140127	50 mm

Rubber hoses

Volvo Penta rubber hoses are specifically designed for use with the engine's cooling system and are designed to withstand both suction and pressure.

Part no	Min. bend radius mm	Rec. stainless steel hose clips	Int. Ø, mm	Ext. Ø, mm
952968		961665	12.7	20.6
952969		961665	16	23.8
952970		961666	19	27
952971		961667	22	30.2
952972		22274884	25.4	33.3
1140664	200	961669	32	41.5
1140670	305	961672	50	61.5
1140671	355	961674	63	75

NEUTRA-SALT

Neutra-Salt engine flushing kit

Designed for both freshwater- and saltwater-cooled engines that have an engine-driven sea-water pump.

The Neutra-Salt Engine Flushing System is available for installation on all inboards and sterndrives. This system is designed for both freshwater- and saltwater-cooled engines that have an engine-driven sea-water pump. As a saltwater boater, you are continually challenged by the corrosive effects of salt -both inside and outside your engine - particularly when the boat is sitting unused in the water. Now, with the installation and use of the Neutra-Salt Engine Flushing System, you have an effective and simple solution to combat internal corrosion and help extend the life of your engine.

Benefits of our flushing system:

- Flushes your engine while the boat is in the water -there is no need to trailer your boat or hook up to a freshwater supply in order to flush and protect your engine.
- Helps protect your engine from saltwater damage.
- Helps prevent corrosion by removing salt deposits, leaving a protective corrosion inhibitor on all metal surfaces, including: Power-steering and oil cooler, engine block, exhaust manifold and risers, thermostat housing, circulating and raw-water pumps.
- Installs easily and operates smoothly.

Kit includes:

0.95 litre of Neutra-Salt motor flushing concentrate, 2.85 litre reservoir with mounting bracket, eight feet of hose, brass sea-water inlet tee fitting, connecting hose for power-steering cooler, hose clamps, rocker switch, “Flush” switch, wiring harness with fuses, and solenoid.

How our flushing system works:

1. To operate, simply engage the “Flush” switch by pushing and holding the dash-mounted switch for 45 seconds while running the engine at idle speed, making sure the engine has an adequate supply of sea water.
2. Once the Flush switch is engaged, the Neutra-Salt concentrate solution will be injected into the cooling system, leaving a corrosion-inhibiting coating on all metal surfaces, thereby neutralizing the salinity of incoming seawater.
3. Before disengaging the Flush switch, you must turn off the engine. For best results, use the Neutra-Salt Engine Flushing System after every trip outing. Boat owners will typically get 10 to 15 flushes before a refill is needed.

Our exclusive Neutra-Salt Concentrate offers many benefits:

It flushes motors, dissolves salt and salt deposits, prevents rust and corrosion (includes a corrosion inhibitor which leaves a protective coating on all metal surfaces), extends the life of metal surfaces exposed to saltwater, and removes salt from engines, fishing equipment, scuba gear, boats, trailers, etc.

Part no	Description
21733731	Kit for engine with 1" or 1 1/4" water inlet hose

Neutra-Salt Concentrate

Our exclusive Neutra-Salt Concentrate offers many benefits:

Flushes motors.

Dissolves salt and salt deposits.

Prevents rust and corrosion (includes a corrosion inhibitor which leaves a protective coating on all metal surfaces).

Extends the life of metal surfaces exposed to saltwater, and removes salt from engines, fishing equipment, scuba gear, boats, trailers, etc.

Part no	Quantity
21687793	Quart/0.95 l
21687796	Gallon/3.8 l

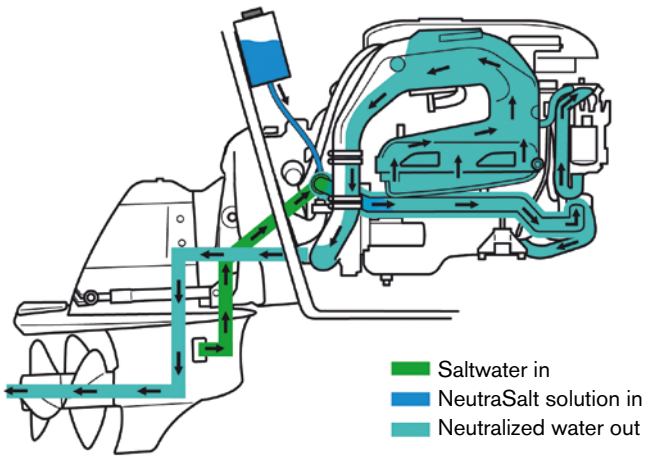

POWER TAKEOFF

An extra alternator and an efficient distributor greatly increase your onboard power supply. And with the power takeoff your engine can power a cooling compressor, hydraulic pump etc.

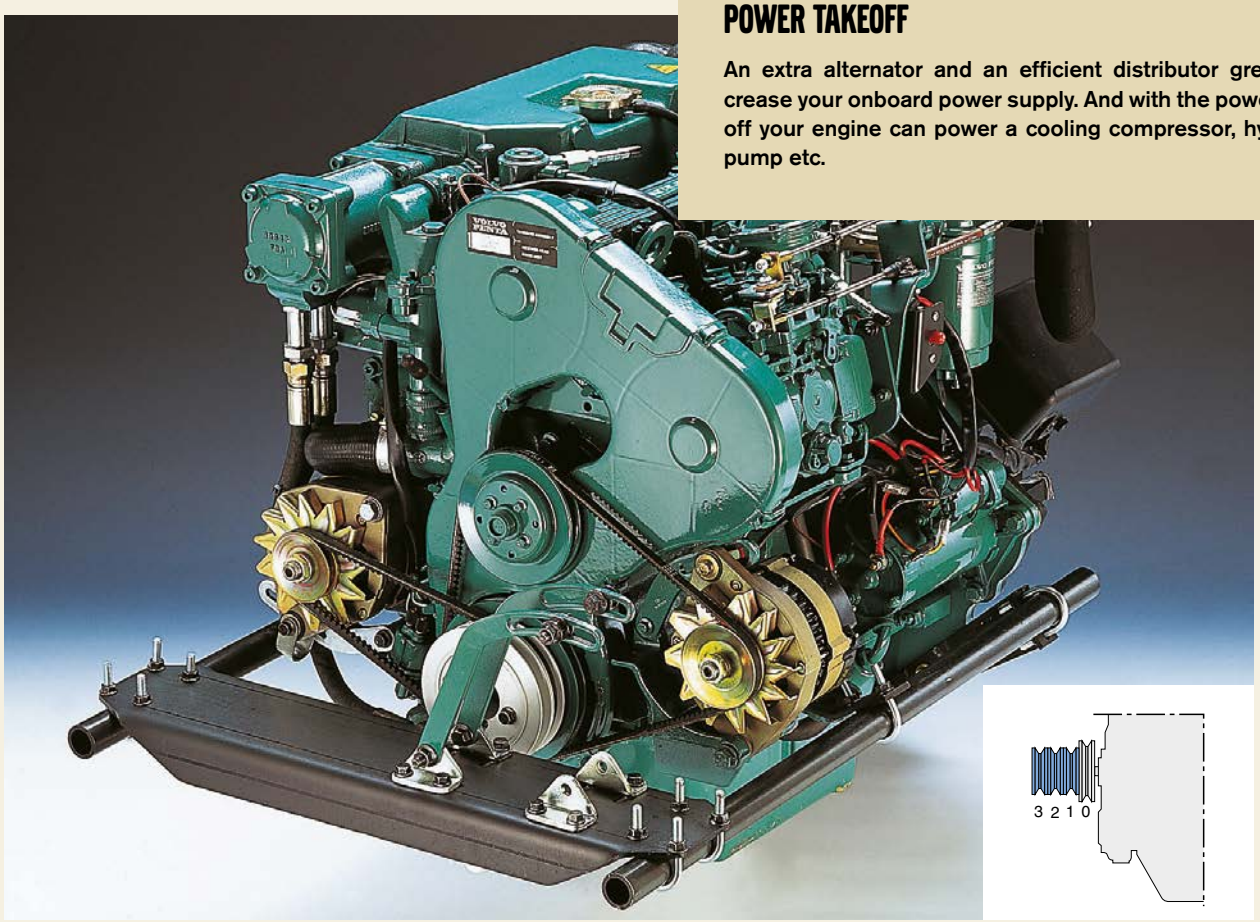

Universal bracket

The front mounted universal bracket enables installation of extra equipment such as cooling compressor or hydraulic pump. The kit includes bracket and fittings.

Part no	Fits engines	
3584501	D4, D6	
3581049	MD2010A–D, MD2020A–D, MD2030A–D	a)
3583586	MD2040A, MD2040B, MD2040C, MD2040D, TAMD22, TMD22, MD22, D2-55 A, D2-55 B, D2-55 C, D2-55 D, D2-55 E, D2-55F, D2-60, D2-75 A, D2-75 B, D2-75 C, D2-75F	b)
3884549	D1-20 A, D1-20 B, D1-20F, D1-30 A, D1-30 B, D1-30F	
3884550	D2-40 A, D2-40 B, D2-40F	
3809865	D3	

a) Pulley and drive belt ordered separately.For engines with S-drives, see information in selection charts.

b) Pulley and drive belt ordered separately. Adapter kit, 3583805, needed with S-drive installations.

Extra pulleys

Auxiliary equipment driven by the drive belt on the crankshaft of the engine increase the load on the crankshaft. It is thus important that the axial location of the pulley on the crankshaft and the location of the equipment in relation to the crankshaft are suited to the extra power requirements of the extra equipment. Maximum power supplied depends on the alignment of the belt, the belt type and the engine type.

Part no	No. of grooves/ pulley	Outer mm	V-belt groove	Length, mm
861157	3	165	HC50	90
3809925	3	165	HC50	90
3809926	1	165	PK6	90
3581048	1	120	HC38	19
3581053	1	120	HC50	19

ELECTRICAL SUPPLY

Today's boats are equipped with more and more electrically powered accessories for both comfort and safety.

Power for lighting, radio transmitters, TV, stereo equipment, fans, heating, etc., drain battery power. As the charging of batteries takes a relatively long time, an extra charge alternator and an extra battery are good investments.

Mounting kit, excluding alternator

Part no	Capacity	Fits engine	Note
3581630	12V/60A alt. 24V/40A	KAD300, KAD32, KAD43, KAD44, KAMD300, KAMD43	Alternator 12V/60A: 873770 Alternator 24V/40A: 872927
3583573	12V/60A alt. 24V/40A	D2-55A, D2-60, D2-75A	Only for D2-55/D2-75 generation A. Also order pulley kit 3583468 and cable kit 3583574, Alternator 12V/60A: 873770, Alternator 24V/40A: 872927
21384685	12V/115A alt. 24V/80A	D2-55, D2-60, D2-75	Not for D2-55/D2-75 generation A, Alternator 12V/115A: 3840181 Alternator 24V/80A: 3840183
21281679	24V/110A	D2-55, D2-60, D2-75	For large casing, 4" dual foot saddle mount alternator (SAE J180 mount)
3884494	12V/60A alt. 24V/40A	D1-20	Also order cable kit 3583574, Alternator: 873770 alt. 872927
3884493	12V/60A alt. 24V/40A	D1-30, D2-40	Also order cable kit 3583574, Alternator: 873770 alt. 872927
21268949	12V/130A, 24V/75A, 24V/110A	D3	For large casing, 4" dual foot saddle mount alternator (SAE J180 mount)
3889549	12V/115A alt. 24V/80A	D4, D6	For EVC-A to EVC-C3. Can not be combined with servo steering. Alternator 12V/115A: 3840181, Alternator 24V/80A: 3840183
22448959	12V/115A alt. 24V/80A	D4, D6	From EVC-D. Can not be combined with servo steering. Alternator 12V/115A: 3840181, Alternator 24V/80A: 3840183

Alternator kit, including alternator

Part no	Capacity	Fits engine	Note
828944	12V/60A	2001, 2002, 2003, 2003T	
3581045	12V/60A	TAMD22, TMD22	Can not be combined with servo steering
22821293	12V/115A	D8	
22821286	24V/110A	D8	
21173893	24V/80A	D9, D11	
21173894	12V/115A	D9, D11	

Alternator

Part no	Capacity	Fits engine
873770	12V/60A	D1-20, D1-30, D2-40, D2-55A, D2-75A
872927	24V/40A	D1-20, D1-30, D2-40, D2-55A, D2-75A
3840181	12V/115A	D2-55, D2-75, D4, D6
3840183	24V/80A	D2-55, D2-75, D4, D6

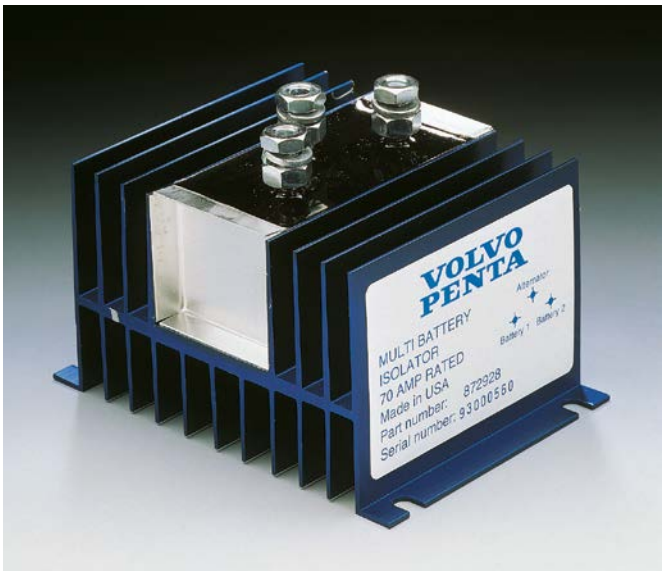

Charge distributor

The charge distributors are specially adapted for Volvo Penta alternators. Two independent battery circuits can be charged at the same time. The starter motor battery will always be charged, even when onboard power consumption has been great and the second battery is flat.

For alternators12-24 V/50-60 A. Equipped with sensor for directly monitoring the voltage of the battery in use.

Part no	Description
873120	6-50 V/ Max 70 A
3840597	6-50 V/ Max 160 A
3589487	12 V/Max 200 A

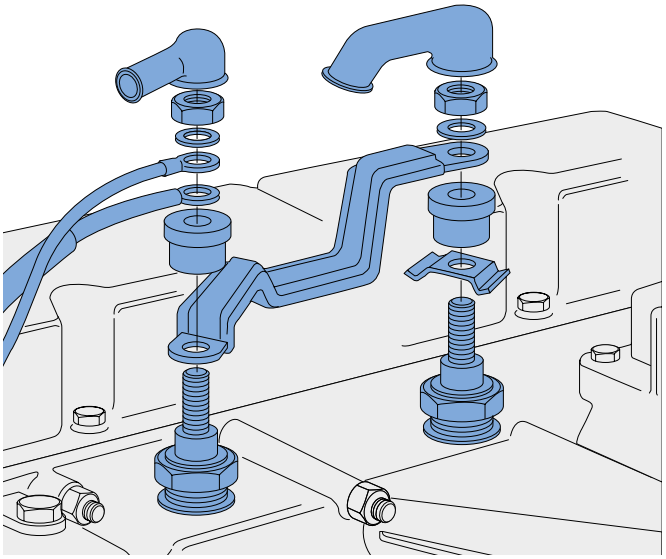

Air pre-heater kit

For engines starting in low ambient temperatures.

The kit contains: 2 glow plugs that are installed in the intake pipe. The glow plugs are activated with the ignition key via a relay to warm up the intake air.

Warning! Never use start spray/gas on engines equipped with glow plugs.

Part no
874117

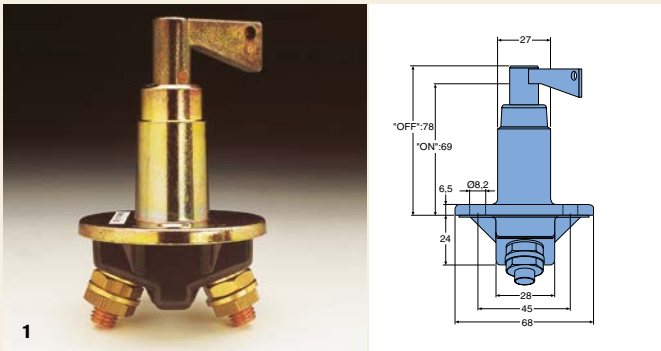

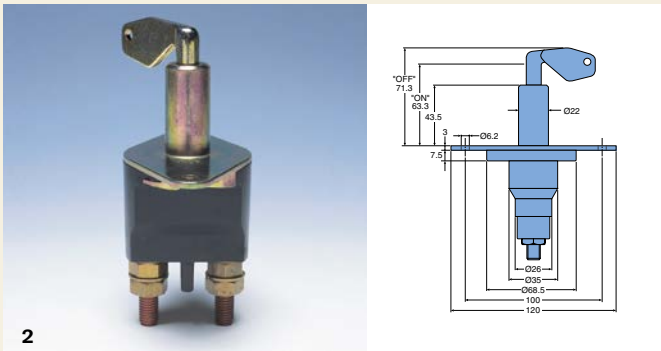

Main switch

Single pole switch in corrosion resistant material for marine use. With removable switch control. Breaks the power circuit for all electrical equipment and is thereby particularly useful in terms of comfort, safety and theft.

Image	Part no	Cont. load	Max load	Working load
1	1140319	150 A	1000 A for 5 s	450 A for 5.5 min
2	22172491	300 A	2500 A for 5 s	-

PROPELLER SHAFT COUPLING

The Volvo Penta two-piece rigid propeller shaft coupling is designed to make installation much easier and less time consuming. It requires no costly machining and thanks to the two-piece conic design, the coupling is perfectly centred onto the propeller shaft. This is essential for minimal vibration, low noise and a better boating experience.

No machining required

No costly machining for tapering and keyway-cutting is required. Just cut the propeller shaft to the correct length and fit the coupling cone. Secure it to the coupling flange with the bolts provided and the coupling is complete. The shaft coupling provides a high torsional hold without causing shaft damage.

Perfect central alignment

The two-piece conic design gives the coupling perfect central alignment properties and also provides an absolute distortion free coupling fit. Altogether this makes it easier to achieve a correctly aligned driveline, essential for minimal vibration and low noise.

FEATURES AND BENEFITS:

- Simplified installation and alignment
- Less vibration and noise
- No machining required
- Two-piece conic design
- Perfect central alignment
- High torsional hold without shaft damage
- Compact dimensions, low weight
- Virtually maintenance free
- Easy to disconnect propeller shaft, without re-adjustment
- Integrated counterhold
- Better onboard comfort

Component guide

The Volvo Penta two-piece rigid propeller shaft coupling is delivered complete with bolts, nuts, washers and installation instructions.

Engine	Gearbox	Part no. coupling for shaft 25 mm*	Part no. coupling for shaft 30 mm*	Part no. coupling for shaft 35 mm*	Part no. coupling for shaft 40 mm*
D1	MS10, MS15	21827365	21827366		
D2-40	MS10, MS15		21827366		
D2-55 / D2-75	MS25		21827366		
D2-55 / D2-75	HS25		21820009	21820010	21820011
D3, D4, D6	HS25, HS45, HS63				21820011

* Requiered shaft tolerance: h9 (+0.0 –0.052)

Dimensions

The shaft coupling is made from high grade 1018 steel (E 235 i ISO) with zinc-nickel coating and sealer. With its compact design the shaft coupling is also perfect for installations where space is limited. Suitable if you want to upgrade your boat driveline.

Part no. coupling	L mm (inch)	D mm (inch)	Weight kg (lb)
21827365	63 (2.48)	102 (4.02)	3,1 (6.8)
21827366	63 (2.48)	102 (4.02)	3,0 (6.6)
21820009	63 (2.48)	127 (5.00)	4,9 (10.8)
21820010	67 (2.64)	127 (5.00)	4,8 (10.6)
21820011	67 (2.64)	127 (5.00)	4,7 (10.4)

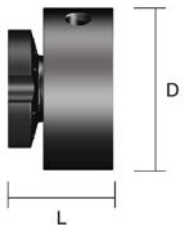

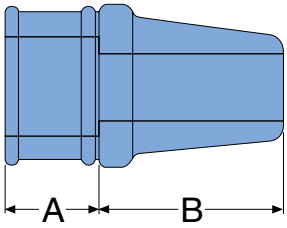

Rubber packing box

Moulded packing box for effective lubrication/sealing. Simple, time saving installation and compact size. Minimal maintenance work – grease every 200 hours or once a year. The packing box is specifically dimensioned for Volvo Penta propeller shafts and sleeves. For effective lubrication it is essential that the packing box bearings are water-lubricated at all speeds. Supplied complete with installation tools and grease tube.

1) Diameter tolerance +0.5 –0.3 mm. The distance between bearing points must not exceed 1500 mm.

Part no	A, mm	B, mm	Shaft Ø, mm	Ext. dia. shaft sleeve mm [1)]
828254	36	66	25	42
828422	36	72	30	48
828526	36	82	35	54
828527	36	82	40	60
3819722	36	92	45	64
3819723	36	92	50	70
3819724	36	66	1"	1 3/4"
3819725	36	75	1 1/4"	2"
3819726	36	82	1 1/2"	2 1/4"
3819727	36	92	1 3/4"	2 1/2"
3819728	36	92	2"	2 3/4"

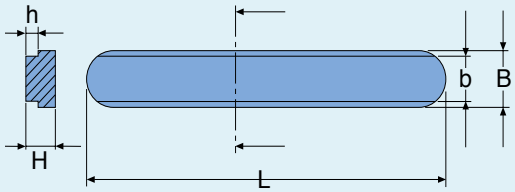

Key for older shafts

A new key is now available for older types of shaft with a 10 mm key slot to make them suitable for new ISO standard bronze propellers.

Part no	b, mm	B, mm	h, mm	H, mm	L, mm	Shaft Ø, mm
3580804	8	10	3.5+0.1	6+0.1	58	30
3580805	10	12	3+0.1	6+0.1	80	40

Rubber bearing

Water-lubricated rubber bearing for stern and support bearings.

Part no	A, mm	B, mm	Shaft Ø, mm
812914	100	38	25
812916	127	44	30
827175	140	48	35
828131	160	54	40

Lock washer for propeller shaft nuts

Note: V9338 = Week 38, year 1993.

Part no	Shaft Ø, mm	
873475	25	a)
828383	25, 30	b)
873488	30	a)

a) Lock washer for propeller shafts manufactured after V9338.
b) Lock washer for propeller shafts manufactured before V9338.

Trolling valve

For installation on the hydraulically operated reverse gear units. Permits a lower speed than is otherwise possible, for example when sport fishing. The trolling valve reduces the propeller speed at a given engine speed. In trolling mode the oil pressure in the discs is reduced enough to permit controlled slip in the disc assembly of the reverse gear unit. The trolling valve is able to reduce propeller speed by up to 80%. It cannot be used with electrically operated reverse gear units.

Note! The engine speed must not exceed 1200 rpm in trolling mode, to avoid overheating of the discs.

Trolling valve kit

Part no	Gearbox
3583486	For HS25.
3583485	For HS45, HS63

AIR HEATER

The air heater extracts heat from the engine's cooling system, which would otherwise be wasted, and transfers it into the cabin. A fan circulates air through a heat exchanger. The air heater makes it possible to make use of the engine closed-circuit cooling system without additional water pipes and radiators.

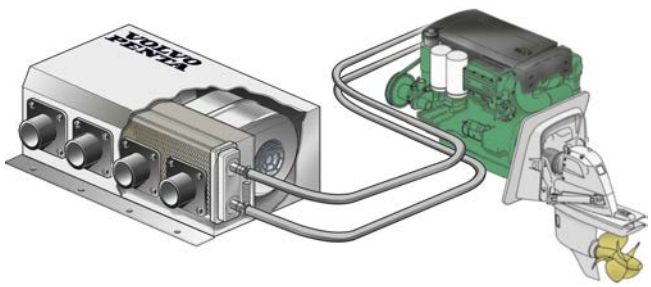

Air heater

Product data:

Output: 10 kW/5 kW

Power supply: 12 V/24 V

Capacity (free flow): 550m 3/330m 3/hour at max. speed

Fan: 3 speed

Casing: Stainless steel

Heat exchanger: Copper/Brass

Weight: 6.6 kg/5.1 kg

Dimensions: 370 x 160 x 236 mm/230 x 160 x 236 mm

Fan type: Radial

Water connection: 16 mm

Part no	Effect	Voltage	
21621753	10 kW	12 V	
21621754	10 kW	24 V	a)
21621751	5 kW	12 V	a)
21621752	5 kW	24 V	a)
21621755	10 kW	12 V	b)

a) 55 mm, b) 60 mm

Four outlets are supplied that can be connected with air hoses. The standard outlets are 55 mm diameter. The airflow can be set at three different speeds.

The air heater is highly efficient and can be installed vertically or horizontally. Its compactness makes it easy to install almost anywhere. The selection of materials; stainless steel for the casing and copper/brass for the heat exchanger, ensures long service in a harsh onboard atmosphere.

The air heater comes in two sizes; 5 and 10 kW. Available for 12 V or 24 V supply, it consumes very little power. Its low noise level is another advantage. The air heater can be installed above the engine and any air trapped in the coolant can be released through a separate bleed valve.

Optional extras include air hoses, hose connections and various types of air valves.

Air heater - accessories

Part no	Description
21656846	Hose connector kit, 50 mm
21656848	Hose connector kit, 60 mm
21656849	Hose connector kit, air intake, 80 mm
41103307	Switch
21656851	Nozzle, adjustable, black 50 mm
21656852	Nozzle, adjustable, black, 55 mm
21656853	Nozzle, adjustable, black, 60 mm
21656854	Hose, 50 mm (sold per meter)
21656855	Hose, 55 mm (sold per meter)
21656856	Hose, 60 mm (sold per meter)
21656857	Hose, air intake, 80 mm
41103317	Hose connector kit, 55 mm
41103316	Y-connector, 80 mm
41103325	Y-connector, 60 mm
21656859	Y-connector, 55 mm
41103329	High-flex hose, 55 mm

SOUND ABSORBENT PANELS

The sound absorbants have a very good isolating and absorbing effect with a density of 100 kg/m³ (6,24 lb / ft³), and are well adapted to the noise frequency and noise level of marine engines (see diagram). They are made of recycled foam, which has a combination of weight and porosity that both insulates and absorbs.

Two versions

The sound absorbants are sold in sheets of 500 mm x 1000 mm (20 in x 40 in), they are easy to handle both in transport and when mounted. They are available in three thicknesses, 20, 30 and 50 mm, and can easily be cut to shape with a sharp knife. The sheets come in two versions, self-adhesive and nonadhesive.

Fire resistant material

Sound Absorbent Panels are approved for installation in boats to be CE marked according to EU Directive 94/25/EC. The material is treated with a fireresistant formula and withstands temperatures up to max. 200°C/390°F. The material is covered with an oil resistant foil that easily could be cleaned from any oil spray etc.

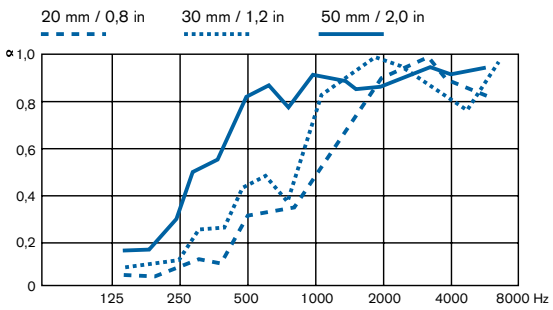

Sound absorption diagram according to DIN 52215

Optimum performance is reached at ∝1.0. Depending on the engine noise characteristics (100-8000Hz) select the appropriate thickness of Sound Absorbent panel.

Features:

- Made of recycled polyurethane foam.
- Density of 100kg/m³ / 6,24lb/ft³.
- Protection film of aluminium foil.
- Fire proof reg: ISO3795 (FMVSS302).
- Temperature resistance: Max. 200°C / 390°F.
- Oxygen index: 24% according to ASTM D2863-91 and fulfills ISO 4589-3.

Sound absorbent panels

Part no	Dimension	Rear side	Sound absorbent panel
41103800	500 x 1000 mm	Non-adhesive	20 mm
41103801	500 x 1000 mm	Non-adhesive	30 mm
41103802	500 x 1000 mm	Non-adhesive	50 mm
41103803	500 x 1000 mm	Self-adhesive	20 mm
41103804	500 x 1000 mm	Self-adhesive	30 mm
41103805	500 x 1000 mm	Self-adhesive	50 mm

Best result

To achieve the best possible result, it is important that you fit the sheets properly. The joins must be as tight as possible and covered with foil tape to avoid noise leakage or penetration of water, which could be absorbed by the material. For convenient mountig you can use Sound Insulation Hangers.

Foil tape

Part no	Aluminium tape	Rear side	Length
41103806	Roll	Self-adhesive	5 m
41103809	Roll	Self-adhesive	50 m

Sound insulation hangers

For convenient mounting. 10 pcs.

Part no
41103810

REPOWERING

Installing a new engine is an investment in a better boating experience. With the right engine, you'll enjoy increased reliability, better performance and improved fuel economy, along with a cleaner, quieter and more comfortable ride. Changing to a new engine will also increase the value of your boat.

Volvo Penta offers a wide range of engines – from 12 to 1000 hp – to suit your needs and bring new life to your boat. In addition, we offer several smart repowering kits, designed to make the transition to a new and modern engine easier and more cost effective.

THE D3 REPOWERING KIT

Replace your old diesel or gasoline engine with a new, modern Volvo Penta D3 diesel engine – all while keeping your current drive.

The D3 repowering kit consists of all components needed for a perfect match between the new engine and your existing drive. The kit provides full EVC functionality including electronic shift and throttle for smooth and precise control. In addition, it gives you access to a wide range of accessories, making your boating experience easier, safer and more enjoyable.

Read more about Volvo Penta D3 at www.volvopenta.com

The D3 diesel engine connected to a classic AQ290 drive using the D3 repowering kit.

Drive and engine combinations

The table shows various drive and engine combinations that are available with the D3 Repowering Kit. Always consult your Volvo Penta dealer about the best engine option for your boat and drive.

Drive	D3-140	D3-170	D3-200	D3-220
AQ290	●	●	●	●
AQ290A	●	●	●	●
AQ290-DP	●	●	●	●
AQ290A-DP	●	●	●	●
SP-A, -A1, -A2	●	●	●	●
SP-C	●	●	●	●
SP-E	●	●	●	●
DP-A, -A1, -A2	●	●	●	●
DP-B, -B1	●	●	●	●
DP-C, -C1	●	●	●	●
DP-D, -D1	●	●	●	●
DP-E	●	●	●	●

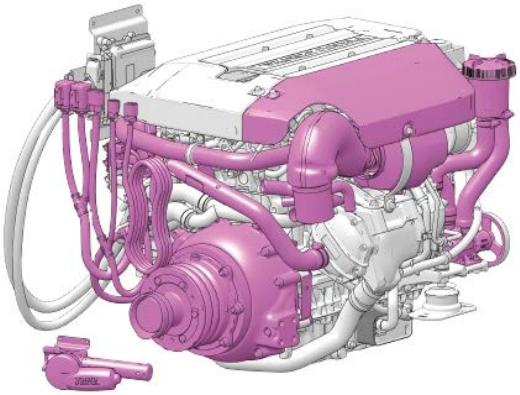

D3 repowering kit. All required components are included, such as adapter ring, exhaust riser, heat shield for turbo and riser, engine cover, installation instruction etc.

Whatever your needs are, your Volvo Penta dealer has the expertise and special tools required to evaluate your repowering options and help you to make the best choice for your boat.

Planning well ahead with a competent partner is the key for a successful repowering.

D1/D2 REPOWERING KIT

Give your boat a new life by replacing your old engine with a new Volvo Penta D1 or D2 diesel engine. The D1/D2 Repowering Kit will make it easier to install the new engine and will cause minimal impact to your existing engine bed.

With a new Volvo Penta engine installed, you will experience the advantages of improved maneuverability, quieter operation, increased performance and charging capacity. You´ll also boost the value of your boat.

The D1/D2 Repowering Kit is available for engines in both shaft and Saildrive installations.

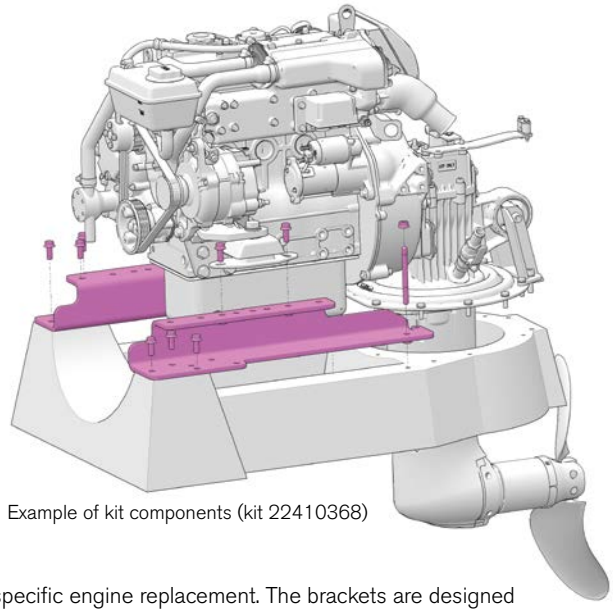

Example of kit components (kit 22410368)

MADE TO MATCH WITH EXISTING ENGINE BED

The D1/D2 Repowering Kit contains a unique set of components required for the specific engine replacement. The brackets are designed to perfectly match the new engine to your existing engine bed, minimizing time consuming fiberglass work. The installation will ensure low vibrations and a quiet boat operation.

Depending on your engine series, the D1/D2 Repowering Kit consists of: Brackets, screws, nuts and installation instruction.:

Below you´ll find possible engine replacements available with the D1/D2 Repowering Kit. Please contact your Volvo Penta dealer for the best repowering options for your boat.

Repowering with Saildrive (from Volvo Penta engine)

Kit no	Note	Current engine	New engine
22410366		MD5	D1-13/20/30
22410368		MD6/7/11/17	D1-13/20/30 & D2-40
22410370		MD17	D2-50/60/75
22410372	Engine bed modifications needed	MD21	D2-50/60/75
22410374		2001	D1-13/20/30
22410376	Engine bed modifications needed	2002/3(T)	D1-13/20/30
22410378		2003/2003T	D2-40
No kit needed		MD2010/2020/2030	D1-13/20/30
22410380		MD2020/30	D2-40
22410382		MD2040	D2-40
No kit needed	Minor engine bed modifications needed	MD22 L/P & TMD22	D1-13/20/30 & D2-40

For above installations the existing Saildrive needs to be replaced, except for the 120S saildrive when repowering to D1-13 to D2-40. Then it's possible to add the kit 22567193 and keep the 120S.

Repowering with gearbox (from Volvo Penta engine)

Kit no	Note	Current engine	New engine
No kit needed	New gearbox MS15L	MD1/2	D1-13/20/30 & D2-40
22594876		MD3	D1-13/20/30 & D2-40
Tool 22340457	Engine bed modifications needed	MD5A-B	D1-13/20/30 & D2-40
22567201		MD6/7A-B	D1-13/20/30 & D2-40
22567203		MD11C-D	D1-13/20/30 & D2-40
Tool 22340457	Engine bed modifications needed	MD17C	D1-13 to D2-75
Tool 22340457	Engine bed modifications needed	MD21A-B	D2-50/60/75
22567205		2001/2/3(T)	D1-13/20/30 & D2-40
No kit needed		MD2010	D1-13/20/30
No kit needed		MD2020/2030	D1-13/20/30 & D2-40
No kit needed		MD2040	D2-50/60/75
No kit needed		MD22L-P & TMD22	D2-50/60/75

For above installations, the gearbox needs to be replaced.

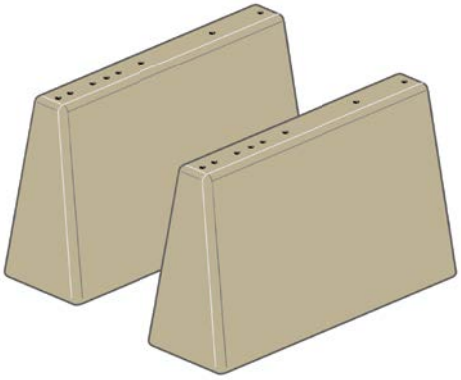

Beam 23065809 (order two)

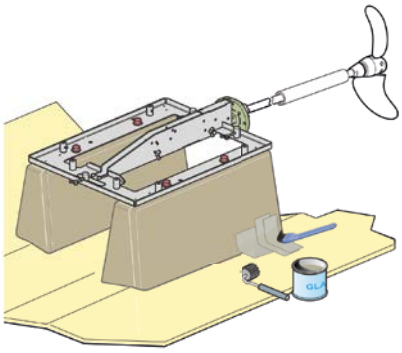

Example from installation manual how to rebuild the engine bed

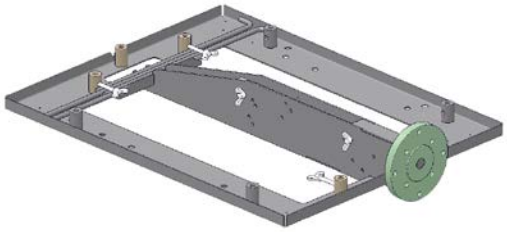

Tool 22340457

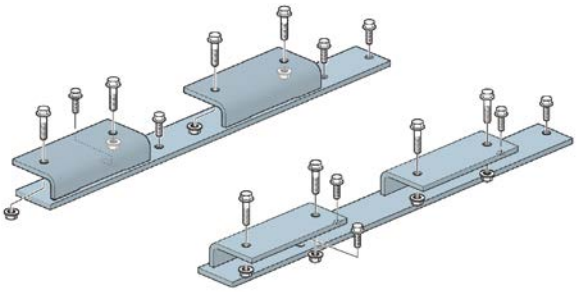

Example of kit components (kit 23059553)

Repowering with Saildrive (from Yanmar engine)

Kit no	Note	Current engine	New engine
23059555	Bed 370 mm	Yanmar SD20/25	D1-13/20/30 & D2-40
23059557	Bed 420/470 mm	Yanmar SD60	D2-50/60/75

For above installations the existing Saildrive needs to be replaced.

Repowering with gearbox (from Yanmar engine)

Kit no	Note	Current engine	New engine
23059549		1GM / 1GM10	D1-13/20/30
23059551		2GM / 3GMD / 3GM	D1-13/20/30 & D2-40
23059551		2QM15 / 2GM20	D1-13/20/30 & D2-40
23059551		3YM30 / 3YM20 / 2YM15	D1-13/20/30 & D2-40
23059551		3HM	D1-13/20/30 & D2-40
23059553		YSE8	D1-13/20/30
23065809	Order two. Tool 22340457 needed	4JH45-KM35P / 4JH45-ZF30M	D2-40/50/60/75
23065809	Order two. Tool 22340457 needed	3QM30 / 3QM30H / 3QM30Y / 3QM30F	D1-30 & D2-40

For all installations the gear box must be replaced. All repowering kits for Yanmar are designed for straight (lined) gear box installation.

PROPELLERS

DEVELOPED FOR PERFECT MATCH

Volvo Penta is world-leading in propeller design. Each propeller is developed exclusively for a specific drive and engine. The design is unique and gives high efficiency at all speeds, safe handling and excellent onboard comfort. Our propellers are made from high-performance stainless steel, aluminium or nickel-bronze-aluminium depending on the specific drive and engine.

A correct choice of propeller is absolutely vital to get the most out of the engine and drive. Their performance decides whether the power produced is turned into boat performance or not.

To get an accurate analysis of what propeller to use with your propulsion system, please contact your local Volvo Penta dealer.

DUOPROP PROPELLERS FOR AQUAMATIC

When Volvo Penta introduced the patented Duoprop in 1982, it was the biggest event in boating since the propeller was invented. Twin counter rotating propellers bite hard to produce unparalleled thrust, straight and true tracking - even in reverse - plus faster acceleration on the plane.

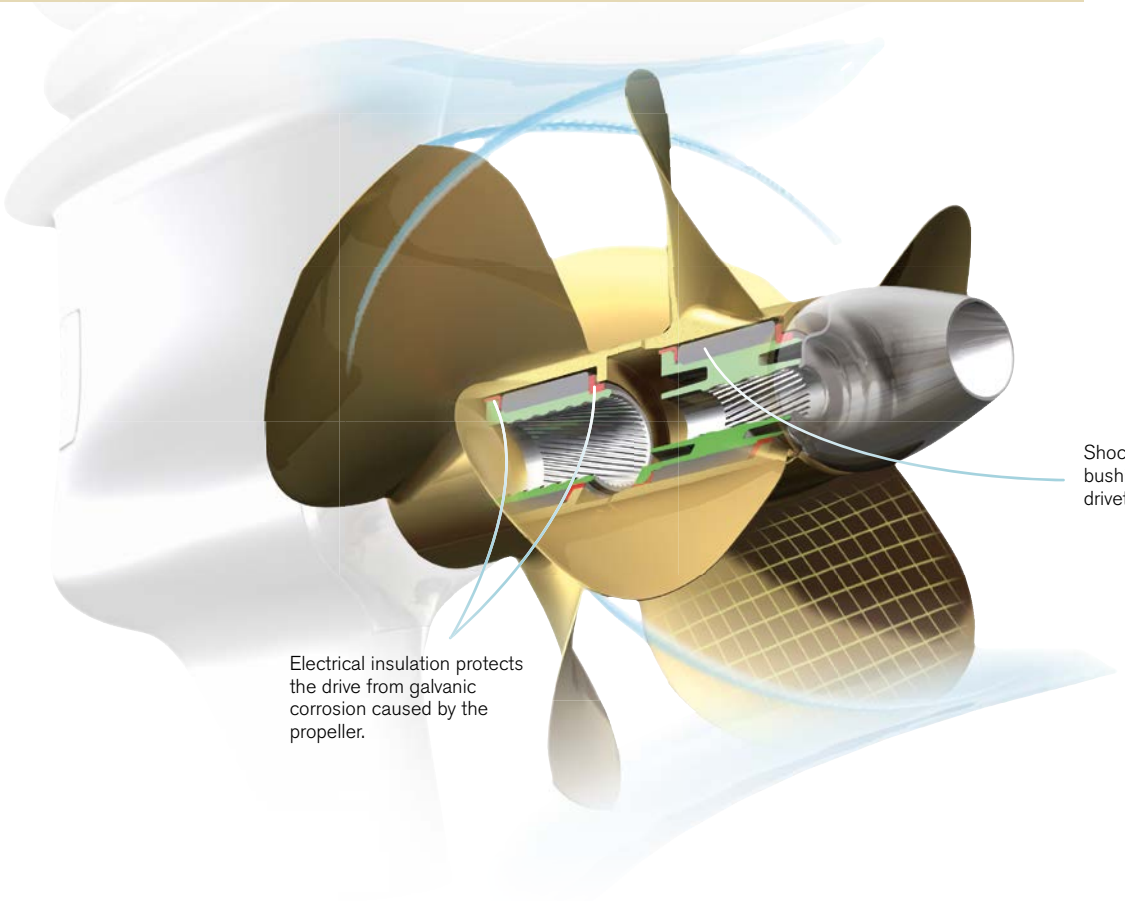

STATE-OF-THE-ART PROPELLER TECHNOLOGY

The superior performance of Volvo Penta's world-leading propellers gives you a better boating experience – and peace of mind. Designed for perfect match, they also secure the service life of your drive.

DUOPROP FOR THE DPH DRIVE

Type G

Designed to capture the tremendous torque from the D4 and D6 engines, the patented blade geometry provides optimal interaction between front and rear propellers for outstanding efficiency and smooth and comfortable operation. The large blade area and great strength ensure maximum grip and maneuverability. The extremely strong nibral (nickel-bronze-aluminum) alloy ensures minimum growth and excellent durability. Complete with shock-absorbing rubber bushing and galvanic isolation makes it perfectly matched for the DPH-drive.

DIM				DIM			
G2	22898642	22898622	22898632	G7	22898647	22898627	22898637
G3	22898643	22898623	22898633	G8	22898648	22898628	22898638
G4	22898644	22898624	22898634	G9	22898649	22898629	22898639
G5	22898645	22898625	22898635	G10	22898650	22898630	22898640
G6	22898646	22898626	22898636				

DUOPROP FOR THE DPR DRIVE

Type GR

The GR propeller is developed to handle the outstanding demand for thrust and strength placed by the DPR high speed drive developed for the D4 and D6 engines. Made in stainless steel.

DIM			
GR7	3863492	3863501	3863502
GR8	3863493	3863503	3863504
GR9	3863494	3863505	3863506

Accessories for the DPH, DPR drives – type G/GR

Part No	Qty	Description
21829326	1	Propeller cone kit - G
3863211	1	Propeller nut, front
3863213	1	Propeller nut, rear
21318669	1	Propeller tool
3588753	1	Bellow kit, exhaust
3594509	1	Bellow kit, transmission

Part No	Qty	Description
828250	1	Lubricating grease 25g
21347121	1	Grease, prop shaft 400ml
22820893	1	Bushing, front - G
22820909	1	Bushing, rear - G
3862770	1	Bushing, front - GR
3862771	1	Bushing, rear - GR

FWD DRIVE

Type K

Specifically designed for the Volvo Penta Forward Drive. These propellers are made of a strong and durable stainless-steel to provide excellent acceleration and top speed. The patented bushing made of a naval brass reduces vibrations, stress on the drivetrain components and prevents corrosion by galvanically isolating the stainless-steel propeller from the aluminum drive casting.

DIM				DIM			
K2	22417005	22414377	22414383	K5	22417008	22414380	22414386
K3	22417006	22414378	22414384	K6	22417009	22414381	22414387
K4	22417007	22414379	22414385	K7	22417010	22414382	22414388

Accessories for the FWD drive – type K

Part No	Qty	Description
22592621	1	Propeller hardware kit*
22413546	1	Propeller cone
60111646	1	Hex socket screw
963683	1	Hex socket screw

Part No	Qty	Description
22477740	1	Propeller nut, front
22477738	1	Propeller nut, rear
22436582	1	Flow deflector

DUOPROP FOR DP280, 290, DP-A TO DP-E DRIVES

Type J

A completely modern aluminum propeller designed for our classic Duoprop drives. The patented blade geometry and large propeller diameter provides optimal efficiency as well as quiet and smooth operation. A special high-strength aluminum alloy and squeeze casting process makes the propellers stronger and more durable than traditional die-cast propellers. Four layers of paint ensures excellent corrosion protection performance.

Note! Always use type C stainless steel propellers in engines exceeding 240 hp or capable of speeds above 38 knots (45 mph). See next page.

DIM			
J 2	21924262	21924222	21924242
J 3	21924263	21924223	21924243
J 4	21924264	21924224	21924244
J 5	21924265	21924225	21924245
J 6	21924266	21924226	21924246
J 7	21924267	21924227	21924247
J 8	21924268	21924228	21924248
J 9	21924269	21924229	21924249
J 10	21924270	21924230	21924250

Upgrade from type A or type B propellers to type J propellers
To ensure the best performance for your boat, consult your Volvo Penta dealer for advice on the right propeller size for your drive and engine. **Note!** Do not mix Type A, B and J propellers. Always use propellers of the same type and size on the drive (or on both drives in twin installations).

Type A

Aluminium DP propeller for diesel engines up to 200 hp. The unique design, of the 3-blade propeller in the front and the 4-blade propeller behind, is the key to the outstanding grip in the water.

DIM				DIM			
A 0	872270	872259	872264	A 6	**	854779	854789
A 1	854764	854774	854784	A 7	**	854780	854790
A 2	**	854775	854785	A 8	**	854781	854791
A 3	**	854776	854786	A 9	**	854782	854792
A 4	**	854777	854787	A 10	**	854783	854793
A 5	**	854778	854788				

** For complete kit use the J-series propellers.

Type B

Aluminium DP propeller for gasoline and diesel engines (diesel up to 230 hp). The two 3-blade propellers have very thin blade profiles, demanding the highest level of precision. For speeds above 35 knots we recommend the stainless Type C propeller.

DIM				DIM			
B 1	**	854822	854830	B 5	**	854826	854834
B 2	**	854823	854831	B 6	**	854827	854835
B 3	**	854824	854832	B 7	**	854828	854836
B 4	**	854825	854833	B 8	**	854829	854837

** For complete kit use the J-series propellers.

DUOPROP FOR DP280, 290, DP-A to DP-G DRIVES

Type C

The Volvo Penta state-of-the-art stainless steel DP propeller has been specially designed to give maximum thrust where most needed. The high speed is achieved through thinner blades and powerful thrust. Greater torsional strength adds faster acceleration. The stainless steel material makes the propellers durable and highly resistant to cavitation, damage and corrosion. All these factors contribute to excellent handling and comfort.

DIM				DIM			
C 2	3588222	3587864	3587870	C 5	3588225	3587867	3587873
C 3	3588223	3587865	3587871	C 6	3588226	3587868	3587874
C 4	3588224	3587866	3587872	C 7	3588227	3587869	3587875

Accessories for the DP280, 290, DP-A to DP-G drives - type A, B, C, J

Part No	Qty	Description
3851334	1	Propeller nut
3858458	1	Thrust ring
3858457	1	Thrust ring
872549	1	Propeller cone – shaft 20 mm
872614	1	Propeller cone – shaft 16 mm
876633	1	Bellow kit, Exhaust (DP280-DPE)
876631	1	Bellow kit, Exhaust (DP290-DPE)
876294	1	Bellow kit, CV joint (DP280)

Part No	Qty	Description
876294	1	Bellow kit, CV joint (DP290, DP-A to DP-G)
873058	1	Propeller tool
828250	1	Lubricating grease 25g
21347121	1	Grease, prop shaft 400ml
3851533	1	Bushing, front (type A, B)
3851534	1	Bushing, rear (type A, B)
3843315	1	Bushing, front (type C)
3843316	1	Bushing, rear (type C)

DUOPROP FOR THE DPX DRIVE

Type E

This stainless steel propeller is specially developed to handle the high forces of the DPX high speed drive. Handling speeds up to 75 knots put high demands on the propellers performance.

DIM			
E 2	3860065	872422	3860011
E 3	3860066	872423	3860012
E 4	3860067	872424	3860013

Accessories for the DPX drive – type E

Part No	Qty	Description
3851335	1	Propeller nut
872179	1	Propeller nut
872546	1	Lock screw
876631	1	Bellow kit, Exhaust
876294	1	Bellow kit, Transmission

Part No	Qty	Description
885195	1	Propeller tool
828250	1	Lubricating grease 25g
21347121	1	Grease, prop shaft 400ml
872176	1	Bushing, front
872177	1	Bushing, rear

DUOPROP FOR THE DPS-A DRIVE

Type I

A propeller introduced replacing the D-series. The development work and experience from the successful DPH and IPS twin -propellers has been transferred to an aluminium propeller series with straight splines.

The propeller series are smooth running with high comfort level. The blade geometry with thinner and larger (patented design) gives improved performance regarding acceleration, top speed and propeller grip. The design, material and its surface treatment gives a good cavitation resistance. The series also have improved 4-layer surface treatment including pre-treatment for corrosion protection. The I-series is recommended for boat speeds up to 38 knots (45 mph)

Note! Do not mix D series with I series on the same drive. For twin installations use only the same propeller type on both drives.

DIM				DIM			
I 2	21258482	21260642	21657162	I 7	21258487	21260647	21657167
I 3	21258483	21260643	21657163	I 8	21258488	21260648	21657168
I 4	21258484	21260644	21657164	I 9	21258489	21260649	21657169
I 5	21258485	21260645	21657165	I 10	21258490	21260650	21657170
I 6	21258486	21260646	21657166				

Type D

The aluminium propeller for all gasoline and diesel engines using the DPS drive. The D-series is replaced by the I-series.

Note! Do not mix D series with I series on the same drive. For twin installations use only the same propeller type on both drives.

DIM				DIM			
D 0	**	3851420*	3851440*	D 5	**	3856345*	3856355*
D 1	**	3851421*	3851441*	D 6	**	3856346*	3856356*
D 2	**	3851422*	3851442*	D 7	**	3856347*	3856357*
D 3	**	3851423*	3851443*				

* The D-series front and rear propeller are only available as spare parts for existing installations.
** For complete kit use the I-series propellers.

Type F

The stainless steel option for high performance gasoline and diesel engines with DPS drive. The material used gives the propeller blades greater torsional strength. The propellers are electrically insulated from the drive to prevent galvanic corrosion.

DIM				DIM			
F 2	3857563	3857557	3857558	F 6	3851496	3851466	3851476
F 3	3857564	3857559	3857560	F 7	3851497	3851467	3851477
F 4	3851494	3851464	3851474	F 8	3851498	3851468	3851478
F 5	3851495	3851465	3851475	F 9	3851499	3851469	3851479

Accessories for the DPS-A drive – type D, F and I

Part No	Qty	Description
3851569	1	Propeller nut, front
21631162	1	Propeller nut, rear
3851600	1	Front spacer ring
3888916	1	Bellow kit, Exhaust
22197130	1	Bellow kit, Transmission
3862797	1	Propeller tool, front

Part No	Qty	Description
3862808	1	Propeller tool, rear
3855516	1	Propeller tool kit
828250	1	Lubricating grease 25g
21347121	1	Grease, prop shaft 400ml
3851258	1	Bushing, front (type D & F)
3851259	1	Bushing, rear (type D & F)

DUOPROP FOR THE DPS-B DRIVE

Type IH

The new IH-series have the same benefits as Type I but is specially made for the DPS-B drives with helical splines. Only FH- and IH-series propellers have the helical splines. The IH-series is the aluminium option for the DPS-B drive.

Important! IH propellers are only approved on D3 diesel and 4.3L gasoline applications below 38 knots (45mph).

DIM				DIM			
IH 2	21661942	21661902	21661922	IH 7	21661947	21661907	21661927
IH 3	21661943	21661903	21661923	IH 8	21661948	21661908	21661928
IH 4	21661944	21661904	21661924	IH 9	21661949	21661909	21661929
IH 5	21661945	21661905	21661925	IH 10	21661950	21661910	21661930
IH 6	21661946	21661906	21661926				

Type FH

The stainless steel option for high performance gasoline and diesel engines with DPS-B drive. Only FH and IH series propellers have the helical splines. The FH propeller is designed to transfer all thrust from the propeller to the main body of bushing. This ensures that the propeller cannot walk forward on the bushing. The propellers are electrically insulated from the drive to prevent galvanic corrosion.

DIM				DIM			
FH 2	3885838	3885846	3885847	FH 6	3885842	3885854	3885855
FH 3	3885839	3885848	3885849	FH 7	3885843	3885857	3885859
FH 4	3885840	3885850	3885851	FH 8	3885844	3885860	3885861
FH 5	3885841	3885852	3885853	FH 9	3885845	3885862	3885863

Accessories for the DPS-B drive – type FH and IH

Part No	Qty	Description
3851569	1	Propeller nut, front
21631162	1	Propeller nut, rear
3851600	1	Front spacer ring
21604545	1	Bushing, front (type FH)
21604578	1	Bushing, rear (type FH)
3888916	1	Bellow kit, Exhaust
22197130	1	Bellow kit, Transmission
3862797	1	Tool, front
3862808	1	Tool, rear
3855516	1	Tool kit
828250	1	Lubricating grease 25g
21347121	1	Grease, prop shaft 400ml

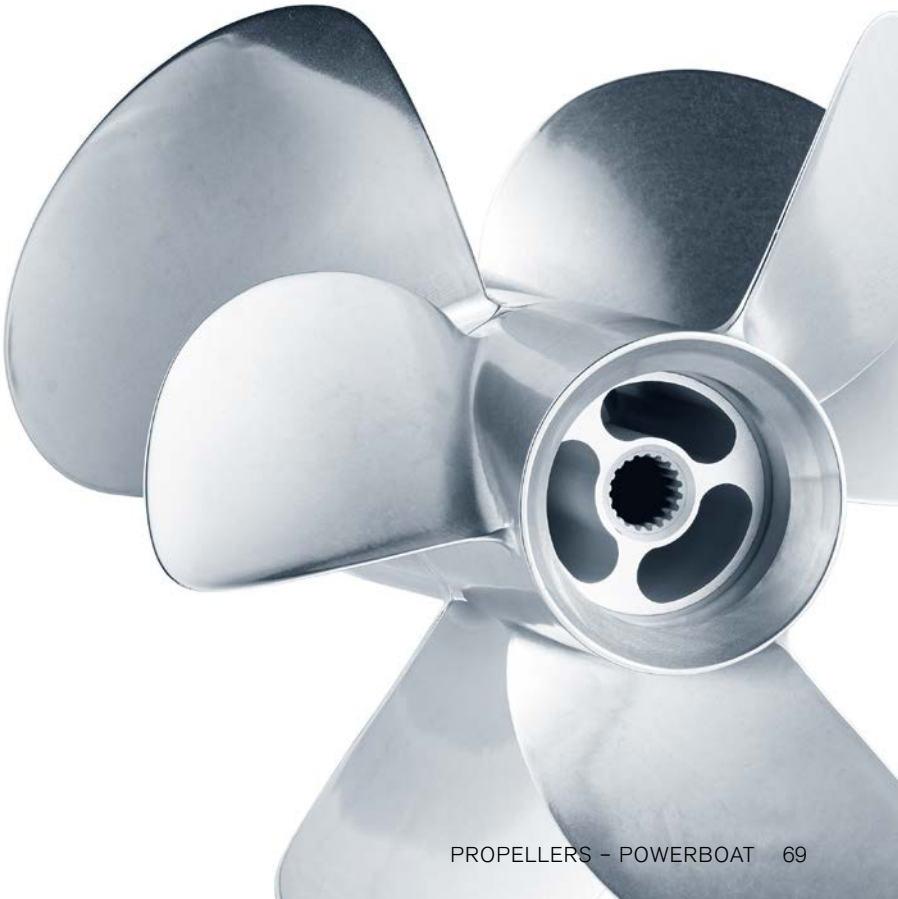

SINGLE PROPELLERS FOR AQUAMATIC

The Volvo Penta single propellers are made from aluminium or high-performance stainless steel and are available for right-hand and left-hand rotation. Developed and tested for each application to ensure performance, handling and life expectancy. The design is unique, which results in high efficiency at all speeds, safe handling, easy maneuvering – and excellent onboard comfort.

SINGLE PROPELLER FOR THE 200-290 DRIVES

The increased blade area of the high speed propeller makes it most suitable for use with high power engines and at high revs. In a fast boat this does not only mean increased speed, it also means that a heavily loaded boat will plane more quickly and enjoy better fuel economy. The high speed propeller's excellent reversing characteristics also mean faster and safer quayside manoeuvring.

Aluminium high speed long hub propeller

V6 and V8 engines should always be fitted with the long hub which is also suitable for 4 cylinder petrol engines.
HS = High Speed propeller

Ø x Pitch			Ø x Pitch		
14 x 17	854977	854992	16 x 9	854985	—
14 x 19	854978	854993	16 x 13	854986	872000
14 x 21	854979	854994	16 x 15	854987	872001
14 x 23	854980	854995	16 x 17	854988	872002
15 x 15	854981	854996	16 x 19	854989	872003
15 x 17	854982	854997	16 x 21	854990	872004
15 x 19	854983	854998	16 x 23	854991	872005
15 x 21	854984	854999			

Aluminium high speed and standard propeller, short hub

STD = Standard Propeller HS = High Speed propeller

Ø x Pitch			Ø x Pitch		
14 x 13	813284 STD	813285 STD	15 x 11	813296 STD	813297 STD
14 x 15	814626 HS	814631 HS	15 x 13	813316 STD	813317 STD
14 x 17	814627 HS	814632 HS	15 x 15	814611 HS	814615 HS
14 x 19	814628 HS	814633 HS	15 x 17	814612 HS	814616 HS

Accessories single propellers

Part No	Qty	Description
876294	1	Bellow kit (DP200-290)
873058	1	Propeller tool kit
828250	1	Lubricating grease 25g
21347121	1	Grease, prop shaft 400ml
854045	1	Propeller cone

Part No	Qty	Description
854047	1	Spacer ring
897367	1	Tab washer
850888	1	Thrust washer
850889	1	Screw
3851531	1	Bushing (HS long hub)

Standard propellers for 100 drives with cylindrical shaft and locking pin

HS = High Speed propeller

Ø x Pitch		
13 x 13	813224	813233
13 x 15	839186 HS	
14 x 11	813227	
14 x 11	804449	
14 x 13	813229	
14 x 15	832992	

SINGLE PROPELLERS FOR SX DRIVE

The SX propeller is available in 3-blade aluminium and stainless steel as well as 4-blade aluminium. The 3-blade SX is perfect for the standard installation and the stainless propeller being the perfect choice for high speeds. The 4-blade SX propeller is the perfect choice when acceleration and remaining planing at lower revs are important.

3-Blade

Aluminium Ø x Pitch			
14,3 x 21	–		3817469
14,2 x 23	–		3817470
14,5 x 19	3817473		3817468
14,8 x 17	3817472		3817467
15 x 15	3817471		3817466
15,5 x 12	3855476		–
15,5 x 13	3855477	16 x 13	3840720
15,5 x 14	3855478		–

3-Blade

Stainless steel Ø x Pitch		
14,75 x 17	3860714	3862462
14,75 x 19	3860715	3860708
14,75 x 21	3860716	3860709
14,25 x 23	3860717	3860710

4-Blade

Aluminium Ø x Pitch		
14,75 x 15	3587519	3587517
14,5 x 17	3587521	3587520
14,25 x 19	3587523	3587522
14 x 21	3587525	3587524
14 x 23		3587526

Accessories for the SX drive – Aluminium, Stainless Steel

Part No	Qty	Description
3850984	1	Propeller nut kit
3852350	1	Spacer
3862086	1	Bushing (3-blade stainless steel/aluminium)
3852056	1	Cotter pin

Part No	Qty	Description
3587601	1	Bushing (4-blade)
828250	1	Lubricating grease 25g
21347121	1	Grease, prop shaft 400ml

PROPELLERS FOR VOLVO PENTA IPS

The Volvo Penta IPS propellers are made to add to the revolutionary Volvo Penta IPS propulsion systems outstanding performance. Our propellers for Volvo Penta IPS take full advantage of the twin, counter-rotating concept. The propellers have perfect balance and are developed to match perfectly.

The front and rear propellers must interact in perfect harmony to deliver optimized performance. Volvo Penta has done extensive testing to ensure a perfect match throughout to complete drivetrain. Incorrect balance leads to excessive wear on the drivetrain. The nickel-aluminium-bronze propeller is developed to add to the revolutionary IPS propulsion system's outstanding performance. The design combined with a material that withstands corrosion, as well as minimizing growth, ensure optimum performance and outstanding manoeuvrability.

PROPELLERS FOR VOLVO PENTA IPS 1 DRIVE

Type T

DIM				DIM			
T2	3861092	3861093	3861094	T7	3861107	3861108	3861109
T3	3861095	3861096	3861097	T8	3861110	3861111	3861112
T4	3861098	3861099	3861100	T9	3861113	3861114	3861115
T5	3861101	3861102	3861103	T10	3861116	3861117	3861118
T6	3861104	3861105	3861106				

Type TS – Semi-planing

DIM				DIM			
TS3	21368025	21368026	21368027	TS5	21258473	21258474	21258475
TS4	21368016	21368017	21368018	TS6	21368012	21368013	21368014

Accessories for propellers to Volvo Penta IPS drive – type T & TS

Part No	Qty	Description
22077581	1	Propeller cone kit
21293480	1	Propeller cone
3862454	1	Plastic ring
3861209	1	Lock ring
3861087	1	Lock nut

Part No	Qty	Description
3861088	1	Lock plate
963699	9	Hex. socket screw
21686492	1	Line cutter
828250	2	Lubricating grease 25g
21347121	1	Grease, prop shaft 400ml

PROPELLERS FOR VOLVO PENTA IPS 15 DRIVE

Type N/NS

Specifically developed for IPS with D8 engines to give outstanding efficiency, onboard comfort and maneuverability.

DIM				DIM			
NS4	21916044	21915974	21915994	N4	21808224	21808194	21808214
NS5	21916045	21915975	21915995	N5	21808225	21808195	21808215
N1	21808221	21808191	21808211	N6	21808226	21808196	21808216
N2	21808222	21808192	21808212	N7	21808227	21808197	21808217
N3	21808223	21808193	21808213				

Accessories for propellers to Volvo Penta IPS drive – type N & NS

Part No	Qty	Description
21815881	1	Propeller cone
963699	9	Hex socket screw
21815875	1	Propeller nut, front
21816205	1	Felt washer

Part No	Qty	Description
21913550	2	Line cutter
21815872	1	Propeller nut, rear
21808200	1	Flow deflector
963696	4	Hex socket screw
85145750	1	Locking fluid (10 ml)

PROPELLERS FOR VOLVO PENTA IPS 2 DRIVE

Type P & PS

DIM				DIM			
PS4	21622828	21622814	21622823	P4	3843962	3843963	3843964
PS5	21622827	21622813	21622822	P5	3843965	3843966	3843967
P1	3843980	3843981	3843982	P6	3843968	3843969	3843970
P2	3843956	3843957	3843958	P7	3843971	3843972	3843973
P3	3843959	3843960	3843961	P8	3843974	3843975	3843976

Accessories for propellers to Volvo Penta IPS drive – Type P & PS

Part No	Qty	Description
21154200	1	Propeller cone
	1	Spacer sleeve
3843992	1	Plastic ring
3593639	1	Felt washer
21154206	1	Propeller nut

Part No	Qty	Description
21154277	1	Propeller nut
21686494	1	Line cutter
828250	2	Lubricating grease 25g
21347121	1	Grease, prop shaft 400ml

PROPELLERS FOR VOLVO PENTA IPS 3 DRIVE

Type Q & QS

DIM				DIM			
QS5	21821365	21821255	21821265	Q4	21433624	21433604	21433614
Q1	21433621	21433601	21433611	Q5	21433625	21433605	21433615
Q2	21433622	21433602	21433612	Q6	21433626	21433606	21433616
Q3	21433623	21433603	21433613	Q7	21433627	21433607	21433617

Type QE

The QE series is developed for marine commercial vessels operating in polluted waters with a lot of debris. It has thicker blades compared to Q, adding strength but can slightly reduce the top speed.

DIM				DIM			
QE1	22059721	22059611	22059631	QE3	22059723	22059613	22059633
QE2	22059722	22059612	22059632	QE4	22059724	22059614	22059634

Accessories for propellers to Volvo Penta IPS drive – type Q, QS & QE

Part No	Qty	Description
40005165	1	Propeller cone
40005161	1	Propeller nut
40005157	1	Propeller nut
21235219	1	Felt washer
963699	11	Hex socket screw

Part No	Qty	Description
40005165	1	Spinner
21686496	1	Line cutter
828250	2	Lubricating grease 25g
21347121	1	Grease, prop shaft 400ml

Line Cutter

The line cutter is mounted to the rear propeller which creates a very efficient rotating cutting action. It is easy to install using the existing locking bolts and does not increase drag or fuel consumption.

Fits	Part No	Qty	Diameter	Material
IPS 1 [1]	21686492	1	95 mm / 3.7”	316 Stainless steel
IPS 15 [2]	21913550	2	105 mm / 4.1”	316 Stainless steel
IPS 2 [1]	21686494	1	120 mm / 4.7”	316 Stainless steel
IPS 3 [1]	21686496	1	140 mm / 5.5”	316 Stainless steel

[1] Included as standard from serial number: IPS 1 = 3940018643, IPS 2 = 3950002140, IPS 3 = 3950001773.
[2] Included as standard from production start.

VOLVO PENTA FOLDING PROPELLERS – SAILING WITHOUT COMPROMISE

Volvo Penta folding propellers offer the best of both worlds – minimal drag while sailing combined with the high thrust of a fixed propeller while motoring – even in reverse. The unique and patented design always ensures quick and safe opening of the blades for excellent close-quarter maneuverability and minimal stopping distance.

Excellent durability and corrosion resistance thanks to specially developed nibral (nickel-bronze-aluminum) alloy.

High-skew blade design reduces pressure pulses to ensure smooth, low-noise operation with minimal vibrations.

Powerful thrust, even in reverse thanks to the highly efficient and patented blade geometry.

Minimizing drag and increasing speed

Volvo Penta folding propellers improve the performance of your boat minimizing drag and increasing speed – up to 1.5 knots under sail, compared with a fixed propeller. In addition, the sleek profile also reduces the risk of snagging ropes, nets and debris when sailing.

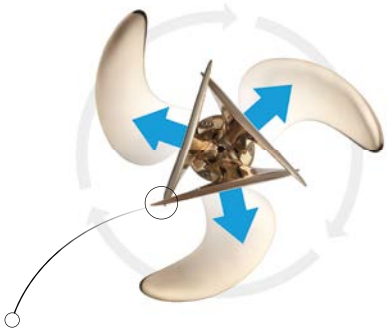

Instant and powerful response – even in reverse

The patented design, with protruding blade tips ensures an instant opening action when the reverse gear is engaged. As soon as the propeller begins to rotate, mounting water pressure on the blade tips forces the blades to open. Centrifugal force then finalizes the opening action.

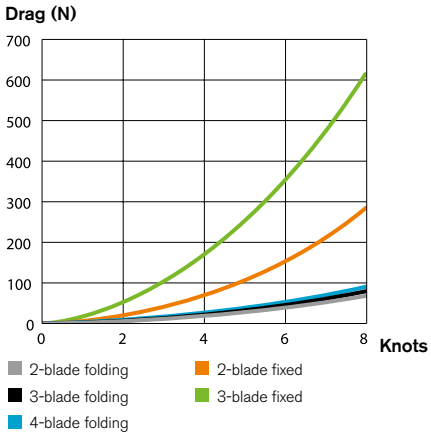

The test was carried out by SSPA Maritime Consulting.
All propellers were mounted on a Saildrive propulsion system.

The graph shows the difference in propeller drag and how rapidly the drag increases with fixed propellers and higher speed. At 8 knots for example, a 3-blade fixed propeller produces more than six times the drag of a 3-blade folding propeller. This means a typical journey across the English Channel can be reduced by up to 4 hours thanks to lower drag.

Rubber bushing and galvanic isolation

Hubs for saildrive propellers include a shock-absorbing rubber bushing to minimize stress on the drivetrain caused by gear changes. In addition, the bushing is designed to galvanically isolate the propeller from the saildrive - preventing galvanic corrosion caused by the propeller.

2-BLADE FOLDING PROPELLER FOR 5-40 HP

Designed for engines from 5 up to 40 hp. Available in multiple sizes and pitches for both S-drives and shafts. Made of extremely strong and durable nibral (nickel-bronze-aluminum) alloy.

- Powerful thrust even in reverse thanks to patented blade geometry
- Smooth, low-noise operation with minimal vibrations
- Safe opening with quick response in both forward and reverse
- Rubber bushing and galvanic isolation (hubs for S-drives)

Note! For a complete propeller, order one blade kit and one hub kit. Propeller size has to be calculated to match engine and gear ratio, please contact your Volvo Penta dealer.

Blade kits

	S-Drive & shaft	Shaft		S-Drive & shaft	Shaft
Ø x Pitch			**Ø x Pitch**		
14 x 7	21629132	21629136	16 x 11	21629182	21629186
14 x 8	21629140	21629144	17 x 11	21629190	21629194
15 x 8	21629147	21629152	17 x 12	21629198	21629201
15 x 10	21629158	21629167	18 x 12	21629205	21629211
16 x 10	21629173	21629177	19 x 13	21629214	21629218

Blade kit includes: Blades, hex key for locking screw (pos 11), locking fluid and installation instruction.

Hub kits

Hub kit for S-drives		**Hub kit for shafts**	
110S, 120S, MS25S, 130S, 150S	21630720	Pre-drilled hub*	21630725
Hub kit for metric standard shaft (1:10 taper)		**Hub kit for SAE standard shaft (1:16 taper)**	
25 mm shaft (key 6 mm)	21630721	1" shaft (key 5/16")	21630723
30 mm shaft (Key 8 mm)	21630722	1 1/4" shaft (key 5/16")	21630724

Hub kit includes: Zinc anodes, locking fluid and installation hardware listed in the table below. * Hub pre-drilled with 8 mm hole. Require final machining to the required shaft diameter and taper. Suitable for shafts up to 31,75 mm (1 ¼").

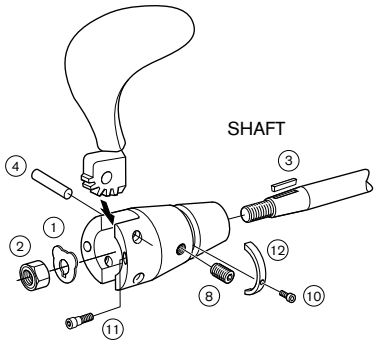

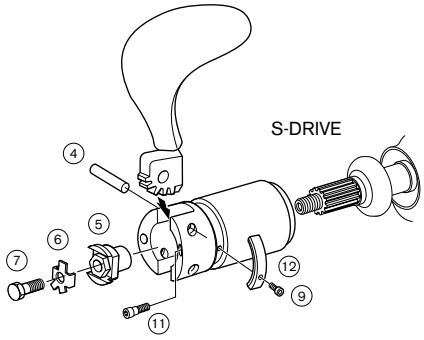

Installation hardware, 2-blade folding propeller

Pos	Part No	Qty	Description
1	873475	1	Tab washer, M16
1	873488	1	Tab washer, M20
2	873473	1	Nut, prop shaft, M16
2	873486	1	Nut, prop shaft, M20
3	873474	1	Key, prop shaft, Ø25mm
3	873487	1	Key, prop shaft, Ø30mm
4	21626924	2	Shaft 1, 2)
5	3584466	1	Propeller nut 1)

Pos	Part No	Qty	Description
6	3851994	1	Lock washer 1)
7	946730	1	Hexagon screw 1)
8	3581246	2	Screw 2)
9	963677	2	Hex. socket screw 1)
10	963675	2	Hex. socket screw 2)
11	3595221	2	Lock screw 1, 2)
12		2	Zinc anode 1, 2, 3)
	85145750	1	Locking fluid (10 ml) 1, 2)

1) Included in hub kit for S-drive. 2) Included in hub kit for shaft. 3) For part number, see page 75.

3-BLADE FOLDING PROPELLER FOR 20-60 HP

Designed for engines from 20 up to 60 hp. Available in multiple sizes and pitches for both S-drives and shafts. Made of extremely strong and durable nibral (nickel-bronze-aluminum) alloy.

- Powerful thrust even in reverse thanks to patented blade geometry
- Smooth, low-noise operation with minimal vibrations
- Safe opening with quick response in both forward and reverse
- Rubber bushing and galvanic isolation (hubs for S-drives)

Note! For a complete propeller, order one blade kit and one hub kit. Propeller size has to be calculated to match engine and gear ratio, please contact your Volvo Penta dealer.

Blade kits

	S-Drive & shaft	Shaft		S-Drive & shaft	Shaft
Ø x Pitch			**Ø x Pitch**		
14 x 7	—	3583409	17 x 12	3583388	3583417
14 x 8	—	3583410	18 x 12	3583389	3583418
14 x 9	3583382	3583411	18 x 13	3583390	3583419
15 x 9	3583383	3583412	18 x 14	3583391	3583420
15 x 10	3583384	3583413	18 x 15	3583392	3583421
16 x 10	3583385	3583414	18 x 16	3584031	3583422
16 x 11	3583386	3583415	19 x 16	3583393	3583423
17 x 11	3583387	3583416			

Blade kit includes: Blades, hex key for locking screw (pos 10), locking fluid and installation instruction.

Hub kits

Hub kit for S-drives		**Hub kit for shafts**	
110S, 120S, MS25S, 130S, 150S	3858955	Pre-drilled hub*	3583428
Hub kit for metric standard shaft (1:10 taper)		**Hub kit for SAE standard shaft (1:16 taper)**	
25 mm shaft (key 6 mm)	3583424	1" shaft (key 1/4")	3583426
30 mm shaft (Key 8 mm)	3583425	1 1/4" shaft (key 5/16")	3583427

Hub kit includes: Zinc anodes, locking fluid and installation hardware listed in the table below. * Hub pre-drilled with 8 mm hole. Require final machining to the required shaft diameter and taper. Suitable for shafts up to 31,75 mm (1 ¼").

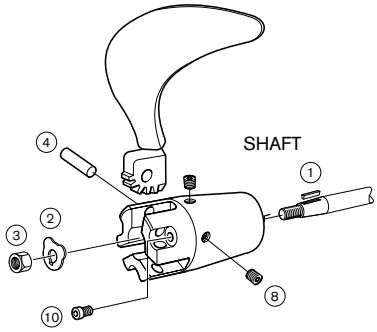

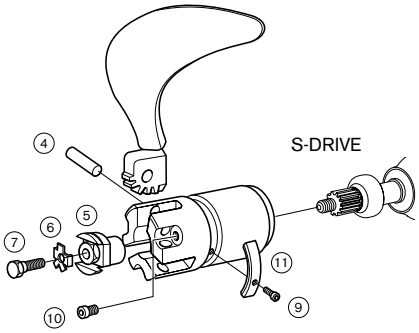

Installation hardware, 3-blade folding propeller

Pos	Part No	Qty	Description
1	873474	1	Key, prop shaft, Ø25mm
1	873487	1	Key, prop shaft, Ø30mm
2	873475	1	Tab washer, M16
2	873488	1	Tab washer, M20
3	873473	1	Nut, prop shaft, M16
3	873486	1	Nut, prop shaft, M20
4	3581243	3	Shaft 1, 2)
5	3584466	1	Propeller nut 1)

Pos	Part No	Qty	Description
6	3851994	1	Lock washer 1)
7	946730	1	Hexagon screw 1)
8	3581246	2	Screw 2)
9	963677	3	Hex. socket screw 1, 2)
10	963695	3	Hex. socket screw 1)
11		2	Zinc anode 1, 3)
	85145750	1	Locking fluid (10 ml) 1, 2)

1) Included in hub kit for S-drive. 2) Included in hub kit for shaft. 3) For part number, see page 75.

4-BLADE FOLDING PROPELLER FOR 55-120 HP

Designed for engines from 55 up to 120 hp. Available in multiple sizes and pitches for both S-drives and shafts. Made of extremely strong and durable nibral (nickel-bronze-aluminum) alloy.

- Powerful thrust even in reverse thanks to patented blade geometry
- Smooth, low-noise operation with minimal vibrations
- Safe opening with quick response in both forward and reverse
- Rubber bushing and galvanic isolation (hubs for S-drives)

Note! For a complete propeller, order one blade kit and one hub kit. Propeller size has to be calculated to match engine and gear ratio, please contact your Volvo Penta dealer.

Blade kits

	S-Drive & shaft	Shaft		S-Drive & shaft	Shaft
Ø x Pitch			**Ø x Pitch**		
20 x 14	3583917	3583918	22 x 18	3583923	3583924
21 x 15	3583919	3583920	22 x 20	3583925	3583926
22 x 16	3583921	3583922			

Blade kit includes: Blades, hex key for locking screw (pos 10), locking fluid and installation instruction.

Hub kits

Hub kit for S-drives		Hub kit for metric standard shaft (1:10 taper)	
110S, 120S, MS25S, 130S, 150S	3583927	25 mm shaft (key 6 mm)	3583928
Hub kit for SAE standard shaft (1:16 taper)		30 mm shaft (Key 8 mm)	3583929
1 1/4" shaft (key 5/16")	3583931	35 mm shaft (Key 10 mm)	3583930
1 1/2" shaft (key 3/8")	3583932	40 mm shaft (Key 12 mm)	3584137

Hub kit includes: Zinc anodes, locking fluid and installation hardware listed in the table below. * Hub pre-drilled with 8 mm hole. Require final machining to the required shaft diameter and taper. Suitable for shafts up to 31,75 mm (1 ¼").

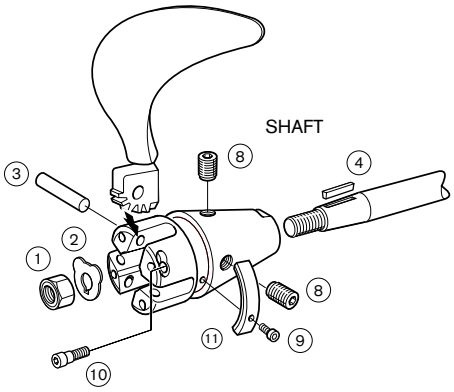

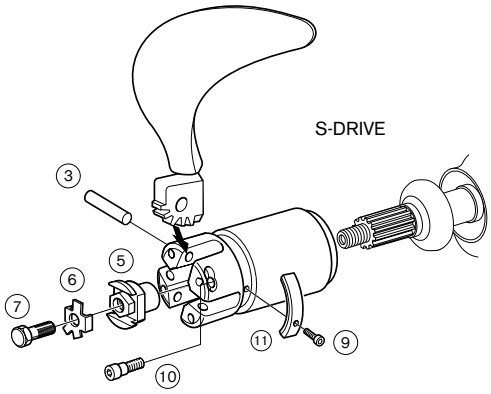

Installation hardware, 4-blade folding propeller

Pos	Part No	Qty	Description
1	873473	1	Nut, prop shaft, M16
1	873486	1	Nut, prop shaft, M20
1	3587422	1	Nut, prop shaft, M24
2	873475	1	Tab washer, M16
2	873488	1	Tab washer, M20
2	873506	1	Tab washer, M24
3	3583951	4	Shaft 1, 2)
4	873474	1	Key, prop shaft, Ø25mm
4	873487	1	Key, prop shaft, Ø30mm
4	873496	1	Key, prop shaft, Ø35mm

Pos	Part No	Qty	Description
4	873505	1	Key, prop shaft, Ø40mm
5	3584466	1	Propeller nut 1)
6	3851994	1	Lock washer 1)
7	946730	1	Hexagon screw 1)
8	3581246	2	Screw 2)
9	963677	3	Hex. socket screw M5x16 1, 2)
10	963695	4	Hex. socket screw M6x14 1, 2)
11		2	Zinc anode 1, 2, 3)
	85145750	1	Locking fluid (10 ml) 1, 2)

1) Included in hub kit for S-drive. 2) Included in hub kit for shaft. 3) For part number, see page 75.

FIXED PROPELLERS FOR SAILDRIVE

Volvo Penta's S-drive propellers are manufactured of aluminium, developed to withstand salt water and cavitation damage. The propellers are manufactured to a high and consistent quality under rigid quality controls.

2-Blade (S-drives 110S, 120S, 130S and 150S)

S-Drive Ø x Pitch		S-Drive Ø x Pitch	
14 x 7	21351239	16 x 13	21351240
14 x 8	21351270	17 x 14	21351232
14 x 9	21351241	17 x 16	21351265
14 x 11	21351275	17 x 17	21353570
15 x 11	21351281	19 x 17	21351284
16 x 11	21351235		

2-Blade (S-drives 50S, 100S)

S-Drive	Ø x Pitch	
MD6A	14 x 8	839514
MB10A	16 x11	839191
MD11C	16 x11	839191

3-Blade (S-drives 110S, 120S, 130S and 150S)

S-Drive Ø x Pitch		S-Drive Ø x Pitch	
14 x 9	21381258	17 x 12	21381274
14 x 11	21381260	17 x 13	21381275
14 x 12	21381262	17 x 14	21401615
15 x 12	21381264	17 x 15	21381279
15 x 13	21381265	17 x 16	21381280
16 x 11	21381283	18 x 16	21381042

Accessories for S-drive

Part No	Qty	Description
22629322	1	Propeller cone kit
851773	1	Screw *
850888	1	Plastic washer
828250	1	Lubricating grease 25g
21347121	1	Grease, propeller shaft 400ml

* Included in propeller cone kit

Choose the right anode

Here are our general recommendations how to choose the anode for the type of water where the boat is used:

Saltwater	–	Zinc
Brackish water	–	Aluminium*
Freshwater	–	Magnesium

* If aluminum anode is not available for your product, select zinc anode instead.

ANODES

Anodes are to be sacrificed in order to protect the drive unit and propeller against galvanic corrosion. Volvo Penta anodes are tested and specially produced for Volvo Penta drives and propellers.

Aquamatic sterndrive – Single prop drives

Lower gear	Zinc	Aluminum	Magnesium
100 drive	875810	—	—
200 – 290, SP	875815	—	876137
Spray plate	**Zinc**	**Aluminum**	**Magnesium**
SX	3855411	3863193	3855412
SX-A	3888814	3888813	3888815
Transom shield	**Zinc**	**Aluminum**	**Magnesium**
200-280	832598	—	873179
290, SP	852835	—	873178
SX	3854130	3586461	3855610
SX-A	3888817	3888816	3888818

Aquamatic sterndrive – Duoprop drives

Lower gear	Zinc	Aluminum	Magnesium
280, 290, DP	875821	—	876138
Spray plate	**Zinc**	**Aluminum**	**Magnesium**
DP-S, DP-SM	3855411	3863193	3855412
DPS-A, DPS-B, FWD	3888814	3888813	3888815
DPH	3588746	3588748	3588750
DPR	3589875	3589876	3589877
DPX	876638	—	—
Transom shield	**Zinc**	**Aluminum**	**Magnesium**
280	832 598	—	873179
290, DP	852 835	—	873178
DP-S, DP-SM	3854130	3586461	3855610
DPS-A, DPS-B, FWD	3888817	3888816	3888818
DPH, DPR	3588745	3588770	3588768
DPX	872139	—	—

S-Drive

Lower gear	Zinc	Aluminum	Magnesium
110S	875812	—	876603
120S, MS25S	876286	—	876604
130S, 150S (2 piece anode)	22651246	—	22651247

Folding propeller

S-drive	Zinc	Aluminum	Magnesium
2-blade propeller	3858399	—	3858400
3-blade propeller	3858399	—	3858400
4-blade propeller	3584442	—	3584443
Shaft	**Zinc**	**Aluminum**	**Magnesium**
2-blade propeller	3888491	—	3888493
3-blade propeller (Use anode for shaft mounting)	—	—	—
4-blade propeller	3584442	—	3584443

Volvo Penta IPS

	Part number*
Lower gear anode	3593981
Transom anode IPS 1	23172849
Transom anode IPS 15, IPS 2, IPS 3, IPS 30	23172856

* The anode system for Volvo Penta IPS is designed to provide protection in salt-, brackish- and freshwater.

Active Corrosion Protection (ACP)

	Part number
Back-up anode, IPS	21174476
Back-up anode, Aquamatic sterndrive	23291530

EXCHANGE COMPONENTS

Genuine performance, lower cost

The Volvo Penta Exchange system gives you access to a comprehensive range of factory remanufactured components – from injectors and turbos to longblocks and IPS drive units – offering a cost-effective alternative to repair and overhaul that brings new life and power to your Volvo Penta product.

The benefits of Volvo Penta Exchange components

- Completely remanufactured to new condition by Volvo Penta
- Updated to the latest technical specifications
- Same quality, reliability and performance as new Genuine Volvo Penta Parts
- Cost-effective alternative to repair and overhaul
- Quick exchange, less downtime
- Environmental benefits through recycling
- Covered by the Volvo Penta 12-month standard warranty, or 24 months when fitted by an authorized Volvo Penta dealer

Download our Exchange catalogue at volvopenta.com or contact your local Volvo Penta dealer for more information.

Learn more about the Volvo Penta remanufacturing process – Watch the video.

Based on a recycle program

Volvo Penta Exchange System is based on a recycle program where you trade in a corresponding worn component in return for a new Exchange component. The program allows you to return the worn component once the new component is installed and the engine is running again.

When buying an Exchange component, a fee will be added on the invoice. The fee is refunded as soon as the worn component is returned.

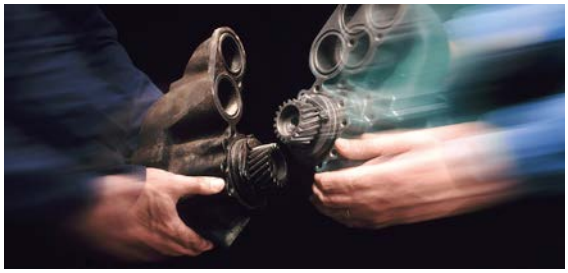

MAINTENANCE PARTS

Take care of your equipment

Regular maintenance and the use of Genuine Volvo Penta Parts will help you get the most out of your engine and your time on the water. This section gives you an overview of the most common parts that need to be replaced regularly to make sure your engine and drive continue to run smoothly and at peak performance.

Always refer the operators manual for recommended service intervals and the maintenance parts that are to be replaced for your engine.

Your Volvo Penta dealer is always ready to help you and provide expertise and service – tailored to your specific needs.

DIESEL ENGINES

2001, 2002, 2003, 2003T	
22057107	Oil filter
829913	Fuel filter
838929	Engine zinc anode
21951342	Impeller (2001, 2002, 2003)
21951346	Impeller (2003T)

AQAD31A, AD31A/B/D/XD/P/L-A, MD31A, TMD31A/B/D/L-A, TAMD31A/B/D/P/L/M/S-A, KAD32A	
3517857	Oil filter
21492771	Fuel filter
838929	Engine zinc anode
858488	Air filter (earlier version)
21646645	Air filter (later version)
21951356	Impeller
876069	Crankcase filter

KAD44P-A/P-B/P-C, KAMD44P-A/P-B/P-C, KAD300A, KAMD300A	
423135	Oil filter
21624740	Fuel filter
876185	Air filter
21951356	Impeller

D1-13, D1-20	
861473	Oil filter
861477	Fuel filter
22222936	Impeller

D1-30, D2-40	
3840525	Oil filter
861477	Fuel filter
22222936	Impeller

D2-50, D2-55, D2-60, D2-75	
3840525	Oil filter
861477	Fuel filter
21951346	Impeller

D3, - MY 2009	
8692305	Oil filter
31261191	Fuel filter
21646645	Air filter, round
21171277	Air filter, square
21951352	Impeller

D3, MY 2010-	
30788490	Oil filter
21139810	Fuel filter
21379288	Air filter
21951352	Impeller

D4, D6	
22030848	Oil filter
22030852	Oil filter, by-pass
21718912	Fuel filter
21702999	Air filter
3584145	Crankcase ventilation filter
3588475	Impeller for D4 all inboard engines, D4 engines A-D with AQ/IPS drives
21951356	Impeller for D4 model E and F with AQ/IPS drives SN 2004033317-
3593573	Impeller for D6 all inboard engines, D6 engines A-D with AQ/IPS drives
22994993	Impeller for D6 model E and F with AQ/IPS drives SN 2006040970-

MD1A/B, MD2A/B, MD5A/B/C, MD11C/D	
22057107	Oil filter
876554	(MD1/2, 5A/B, 11C)
829913	Fuel filter, spin-on (alt. MD5/11)
21951342	Impeller (4 screws in lid)
3586494	Impeller (6 screws in lid)

MD3B, MD17C/D	
22057107	Oil filter
829913	Fuel filter, spin-on (alt. MD17)
876554	Fuel filter, insert
21951342	Impeller

MD6A/B	
22057107	Oil filter
21492771	Fuel filter
21951342	Impeller (4 screws in lid)
3586494	Impeller (6 screws in lid)

MD7A/B	
22057107	Oil filter
21492771	Fuel filter
21951342	Impeller

MD21A/B, AQD21A/B	
21549544	Oil filter
3581078	Fuel filter (CAV)
21951350	Impeller

MD22A/B, TMD22A/B, TAMD22A	
3517857	Oil filter (B, C)
861476	Oil filter (A)
21624740	Fuel filter
21951346	Impeller

MD30A/B/D/AQ, TAMD30A/B/D/AQ, TMD30A/B/D/AQ, AQAD30A	
3517857	Oil filter
21492771	Fuel filter
838929	Engine zinc anode
21951356	Impeller
876069	Crankcase filter
876185	Air filter

MD40A, TMD40A/B/C, TAMD40A/B, AQD40A, AQAD40A/B	
471034	Oil filter
21624740	Fuel filter
838929	Engine zinc anode
21951356	Impeller
21951360	Impeller (TAMD40, AD40)
876069	Crankcase filter
876185	Air filter

MD2010, MD2020, MD2030, MD2040		
861473	Oil filter (MD2010/2020)	
3840525	Oil filter (MD2030/2040)	
861477	Fuel filter	
3586494	Impeller	1)
22222936	Impeller (MD2030/2040)	2)

1) MD2010 SN -5101203008, MD2020 SN -5101309052
2) MD2010 SN 5101203009-, MD2020 SN 5101309053-

TAMD41P/L/M/H-A/H-B, AD41P/L-A, KAD42A/B/P-A, KAMD42A/B/P-A, KAD43P-A, KAMD43P-A	
471034	Oil filter (41)
423135	Oil filter (42-43)
21624740	Fuel filter
838929	Engine zinc anode
858488	Air filter (TAMD41P/L/M/H-A/H-B, AD41P/L-A)
21646645	Air filter (later version 41)
876185	Air filter
21951356	Impeller

TMD41A/B/D/L-A, TAMD41A/B/D, D41A/B/D/L-A, AD41A/B/D, AQD41A, AQAD41A	
471034	Oil filter
21624740	Fuel filter
838929	Engine zinc anode
858488	Air filter
21646645	Air filter (later version)
21951356	Impeller
876069	Crankcase filter

AD31, MD31	
3517857	Oil filter
21492771	Fuel filter
838929	Engine zinc anode (A, B)
858488	Air filter (early model, metal)
21646645	Air filter (late model, plastic)
21951356	Impeller
876069	Crankcase filter (A, B)

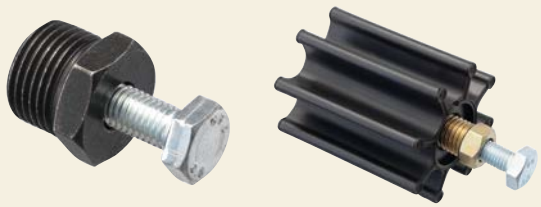

Puller screw

The puller screw is the best way of removing the impeller from the sea water pump. It is very easy and there is no risk of damaging the pump housing.

Part no	Fits impeller
3843947	21951356
3843948	21951352
3843949	21951358

PETROL ENGINES

3.0GLP-C/D/E/J	
835440	Oil filter
21951348	Impeller, kit (C)
21213664	Impeller, kit (D/E/J)
3853799	Thermostat
3856537	Thermostat (o-ring)
3854260	Distributor cap
3854261	Distributor rotor
3888324	Plug wires
3586324	Drive belt (C)
3586325	Drive belt (D)
3860092	Drive belt (E)
3851857	Spark plugs

3.0GXi-J, 3.0GXiC-J	
835440	Oil filter spin on
21213664	Impeller kit
21148403	Thermostat
3856537	Thermostat (o-ring)
3854260	Distributor cap
3854261	Distributor rotor
3888324	Plug wires
21132392	Drive belt serpentine
3851857	Spark plugs

4.3GL-J/JF, GXi-J/JF, OSi-J/JF	
8692305	Oil filter insert
3862228	Fuel filter, spin on (GL-J, JF)
3847644	Fuel filter, spin on (GXi, OSi)
21213664	Impeller kit
3831426	Thermostat kit fresh
3852111	Thermostat gasket fresh/raw
416033	Thermostat o-ring fresh
3587597	Thermostat raw
983944	Thermostat o-ring raw
3854331	Distributor cap (GL)
3854311	Distributor rotor (GL)
3859019	Distributor cap (GXi, OSi)
3858977	Distributor rotor (GXi, OSi)
3888325	Plug wires
21132390	Drive belt
21513423	Spark plugs 6 Pack

4.3GXi-G/GF/OSi-G/GF	
835440	Oil filter
3862228	Fuel filter
21213664	Impeller kit
3831426	Thermostat, kit (GF)
3587597	Thermostat (G)
983944	Thermostat, o-ring (G)
3852111	Thermostat, gasket (G, GF)
3859019	Distributor cap
3858977	Distributor rotor
3888327	Plug wires
3889124	Drive belt
21513423	Spark plugs

5.0GL-J/JF, GXi-J/JF, OSi-J/JF	
8692305	Oil filter insert
3862228	Fuel filter, spin-on (GL)
3847644	Fuel filter, spin-on (GXi, OSi)
21213664	Impeller kit
983944	Thermostat o-ring raw
3852111	Thermostat gasket fresh/raw
3831426	Thermostat kit fresh/raw
3854548	Distributor cap
3862014	Distributor rotor
21132390	Drive belt
21467472	Spark plugs 4 pack

5.0GXi-G/GXi-GF/OSi-G/OSi-GF	
835440	Oil filter
3862228	Fuel filter
21213664	Impeller kit
3831426	Thermostat, kit
3858975	Distributor cap
3858977	Distributor rotor
3889124	Drive belt
21467472	Spark plugs 4 pack

5.7Gi300-J/JF, 5.7OSi-J/JF, 5.7GXi-J/JF, 5.7OSXi-J/JF	
8692305	Oil filter insert
3847644	Fuel filter, spin on
21213664	Impeller kit
3831426	Thermostat kit fresh/raw
3852111	Thermostat gasket fresh/raw
416033	Thermostat o-ring fresh
3587597	Thermostat raw
3858975	Distributor cap
3858977	Distributor rotor
21132390	Drive belt
21467472	Spark plugs 4 pack

5.7Gi-F/Gi-FF/GXi-G/GXi-GF/OSi-E/OSi-EF	
835440	Oil filter
3862228	Fuel filter
21213664	Impeller kit
3831426	Thermostat, kit, fresh
3587597	Thermostat raw
3852111	Thermostat gasket fresh/raw
983944	Thermostat o-ring raw
3858975	Distributor cap
3858977	Distributor rotor
3889124	Drive belt
21467472	Spark plugs 4 pack

7.4GL	
3850559	Oil filter
3862228	Fuel filter
3854286	Impeller (MD)
21951346	Impeller (HU, NC, LK)
3853983	Thermostat
3852071	Thermostat (seal ring)
3852111	Thermostat (gasket)
3851861	Spark plugs

7.4Gi, GSi, DPX385	
3850559	Oil filter
3862228	Fuel filter
21951346	Impeller
3853983	Thermostat
3852071	Thermostat (seal ring)
3852111	Thermostat (gasket)
3851861	Spark plugs (Gi - MD-LK, GSi, DPX)
3851857	Spark plugs (Gi - BY-EF)

8.1Gi-J/JF/GXi-J/JF/OSi-J/JF	
8692305	Oil filter
3847644	Fuel filter
21213664	Impeller kit
3831426	Thermostat, kit, fresh
3852111	Thermostat gasket fresh/raw
3853983	Thermostat, raw
3852071	Thermostat (o-ring, small)
3861000	Thermostat (o-ring, large)
21132385	Drive belt
963699	Spark plugs

8.1Gi-H/HF, 8.1GXi-G/GF, 8.1OSi-D/DF	
835440	Oil filter
3862228	Fuel filter
21213664	Impeller kit
3831426	Thermostat, kit, fresh
3853983	Thermostat, raw
3852071	Thermostat (o-ring, small)
3861000	Thermostat (o-ring, large)
21132390	Drive belt
3861326	Spark plugs

8.2GL	
3850559	Oil filter
3862228	Fuel filter
3854286	Impeller
3853983	Thermostat
3852071	Thermostat (o-ring)
3852111	Thermostat (gasket)
3851861	Spark plugs

8.2GSi, DPX415	
3850559	Oil filter
3862228	Fuel filter
21951346	Impeller (HU-BY)
21951348	Impeller (WT)
3853983	Thermostat
3852071	Thermostat (seal ring)
3852111	Thermostat (gasket)
3851861	Spark plugs

500A/B, 501A/B	
835440	Oil filter
855686	Fuel filter
3581078	Fuel filter
21951346	Impeller
876305	Thermostat
3851861	Spark plugs

570A, 571A, 572A	
835440	Oil filter
855686	Fuel filter
21951346	Impeller (w=31 mm)
876120	Impeller (w=50 mm)
876305	Thermostat
3851861	Spark plugs

740A, B	
835440	Oil filter
855686	Fuel filter
876120	Impeller
876305	Thermostat
3851861	Spark plugs

AQ95, AQ100, AQ110, AQ115, AQ120A, AQ130	
3517857	Oil filter
3581078	Fuel filter
22222936	Impeller
876080	Thermostat

AQ120B, AQ140, AQ145A, AQ165, AQ171	
3517857	Oil filter
3581078	Fuel filter
21951350	Impeller

AQ120B, AQ125A/B, AQ125B, AQ131A/B/C/D, 230A/B, BB140A, AQ140A, BB145A, AQ145A/B AQ151A/B/C, 250B, BB145A, AQ145A/B AQ151A/B/C, 250B	
3517857	Oil filter
21951350	Impeller
875580	Thermostat
875820	Spark plugs

AQ170A/B/C	
3517857	Oil filter
21951350	Impeller
875791	Thermostat
875804	Spark plugs

AQ225B/C/D/E/F	
835440	Oil filter
877765	Fuel filter
3581078	Fuel filter
3854286	Impeller (B/C)
876120	Impeller (D/E/F)
876305	Thermostat
3851861	Spark plugs

AQ231A/B, BB231A	
835440	Oil filter
855686	Fuel filter
3581078	Fuel filter
21951346	Impeller (AQ231A/B)
876120	Impeller (BB231A)
876305	Thermostat
3851861	Spark plugs

AQ255A/B	
835440	Oil filter
877765	Fuel filter
3581078	Fuel filter
3854286	Impeller (AQ255A)
21951346	Impeller (AQ255B, w=31 mm)
876120	Impeller (AQ255B, w=50 mm)
876305	Thermostat
3851861	Spark plugs

AQ260A/B, BB260A/B/C	
835440	Oil filter
877765	Fuel filter
3581078	Fuel filter
21951346	Impeller (w=31 mm)
876120	Impeller (w=50 mm)
876120	Impeller (AQ260B)
876305	Thermostat
3851861	Spark plugs

AQ271A/B/C/D, BB261A	
835440	Oil filter
855686	Fuel filter
3581078	Fuel filter
21951346	Impeller (w=31 mm)
876120	Impeller (w=50 mm)
21951346	Impeller (BB261A)
876305	Thermostat
3851861	Spark plugs

AQ280A, AQ290A	
835440	Oil filter
877765	Fuel filter
3581078	Fuel filter
21951346	Impeller (w=31 mm)
876120	Impeller (w=50 mm)
876305	Thermostat
3851861	Spark plugs

AQ311A/B	
835440	Oil filter
855686	Fuel filter
3581078	Fuel filter
21951346	Impeller (w=31 mm)
876120	Impeller (w=50 mm)
876305	Thermostat
3851861	Spark plugs

BB115A/B/C, AQ115A/B, AQ130A/B/C/D	
3517857	Oil filter
3593654	Impeller
876080	Thermostat
875803	Spark plugs

BB225A/B/C	
835440	Oil filter
877765	Fuel filter (A/B)
855686	Fuel filter (C)
3581078	Fuel filter
21951346	Impeller (w=31 mm)
876120	Impeller (w=50 mm)
876305	Thermostat
3851861	Spark plugs

DRIVES

110S	
22303438	Cover plate against hull
21389074	Rubber seal

120S/S-B/S-C/S-D/S-E	
854932	Cover plate against hull
21389074	Rubber seal

270, 270T	
876294	Drive joint bellow
875822	Coolant hose (270)
876631	Exhaust bellow

280, 280TA/PT	
876294	Drive joint bellow
876633	Exhaust bellow
875822	Coolant hose (280, PT)

280DP	
876294	Drive joint bellow
876631	Exhaust bellow
875822	Coolant hose

290, 290A, SP-A, SP-A1, SP-A2, SP-C, SP-C1, SP-E	
876294	Drive joint bellow
876631	Exhaust bellow
876632	Coolant hose

290DP/DP-A/DP-A1/DP-A2/DP-B/DP-B1/DP-C/DP-C1, DP-D/DP-D1/DP-E	
876294	Drive joint bellow
876631	Exhaust bellow
876632	Coolant hose

DPX-S/S1/R/A	
876294	Drive joint bellow
3860384	Exhaust bellow DPX-A
876631	Exhaust bellow DPX-S/S1/R
876632	Coolant hose

DPH-A/B/C, DPR-A	
3594509	Drive joint bellow
3588753	Exhaust bellow
21132674	Anti-barnacle bellow kit (steering cylinders)
3588767	Coolant hose

SX, DP-S, DP-SM	
23075752	Drive joint bellow
3850426	Exhaust bellow

XDP	
21277185	Drive joint bellow
3885871	Exhaust bellow

SX-A, DPS-A, DPS-B	
23075752	Drive joint bellow
3888916	Exhaust bellow

DPG	
876294	Drive joint bellow
3860384	Exhaust bellow
876632	Coolant hose

Anodes to be found in the propeller section, page 79.

VOLVO PENTA MAINTENANCE KITS

Volvo Penta Maintenance Kits include the basic parts for regular maintenance. All kits contain exclusively Genuine Volvo Penta Parts and are pre-packed for easy ordering.

Maintenance kits for diesel engines

Contains oil filter, fuel filter and impeller with necessary gaskets. Kits for D4 and D6 engines also include air filter, by-pass oil filter and crankcase ventilation filter.

Part no	Engine
877194	2001, 2002, 2003
21189380	MD2010C, MD2020C, MD2030A, MD2030B, MD2030C, MD2040A, MD2040B, MD2040C
877201	D30, D31, D32
877202	D40, D41
877203	D42, D43, D44
21105842	D3 A-C
21189380	D1-13, D1-20
21189422	D1-30, 2-40
21189426	D2-50, D2-55, D2-60, D2-75
21759184	D3 D-H
21704968	D4 all Inboard engines, D4 A-D with AQ/IPS drives
22383875	D4 E-F with AQ/IPS drives SN 2004033317-
21704967	D6 all Inboard engines, D6 A-D with AQ/IPS drives
22383876	D6 E-F with AQ/IPS drives SN 2006040970-

Maintenance kits for Aquamatic Sterndrives

Contains zinc anodes, drive joint bellow and other required parts for regular maintenance.

Part no	Drive
877118	290, 290A, SP-A, SP-A1, SP-A2
877119	290DP, DP-A, DP-A1, DP-B, DP-B1
877120	SX, DP-S, DP-SM
877122	DP-C, DP-D, DP-E
23307656	DPG
23307655	DPH, DPR

Please note that products illustrated may differ from production models. Not all products listed are available in all markets, and standard equipment may vary between different markets. Every effort has been made to ensure that facts and figures are correct at the time of publication. Volvo Penta reserves the right to make changes to the statements and descriptions in the catalogue without prior notice at any time.

Please note that the illustrations in the catalogue are for information purposes only and should not be used for installation or workshop instruction purposes. In such case, reference should be made to the relevant technical publication. Illustrations and dimension sketches do not always fully agree with the actual products.

Products that are affected by EU legislation, RCD - Recreational Craft Directive, 2013/53/EU or EMC – Electromagnetic Compatibility Directive, 2014/30/EU, have been tested and approved according to the respective Directive.

Only products that fulfill the requirements of Recreational Craft Directive 2013/53/EU can be installed in new boats intended for sale in European markets.

This catalogue is also available on the Internet, at www.volvopenta.com

47711350 English 01-2019

VOLVO PENTA

www.volvopenta.com